COPYRIGHT AND CONFIDENTIAL

The information on this document is the property of **BHARAT HEAVY ELECTRICALS LIMITED,** It must not be used directly or indirectly in any way detrimental to the interest of the company.

TECHNICAL SPECIFICATION FOR FIRE WATER PUMPS (HYDRANT, SPRAY WATER, JOCKEY & BOOSTER PUMPS INCLUDING DRIVES) & SEA WATER INTAKE PUMP

[HORIZONTAL CENTRIFUGAL SPLIT CASING TYPE FIRE WATER PUMPS] & [SEA WATER INTAKE PUMP – VERTICAL TYPE]

PROJECT :	**2 X 660 MW TANGEDCO UDANGUDI STPP, STAGE-1**
OWNER :	**TAMIL NADU GENERATION AND DISTRIBUTION CORPORATION (TANGEDCO)**
OWNER CONSULTANT :	**FICHTNER CONSULTING ENGINEERS (INDIA) PRIVATE LIMITED CHENNAI, INDIA**

	Prepared by :	Checked by :	Approved by :	Date :
Revisions: Refer to record of revisions	R. MURALIDHAR	GIRISH PRASAD PALO	M. SIVA PRASAD BABU	19.01.2019

INDEX

S. No.	*DESCRIPTION*
1.0	**Intent of Specification**
2.0	**Special Instructions to Bidders**
3.0	**Project Information**
4.0	**Application of System**
5.0	**Technical Details/Requirements**
6.0	**Scope of Supply**
7.0	**Optional Prices**
8.0	**Equipment qualification criteria (EQC)**
9.0	**Quality Plan & Inspection Agency & Testing**
10.0	**Painting**
11.0	**Packing and Forwarding**
12.0	**Sub Vendors**
13.0	**Documentation**
14.0	**Price Bid Format**
	Annexure 1 – P&ID for Pump & Drive assembly, Layout , Exhaust Piping layout
	Annexure 2 - Pump-Motor-Engine datasheet Annexure 2 –A: Hydrant-Spray Pump-Engine datasheet Annexure 2 –B: Jockey Pump-Motor datasheet Annexure 2 –C: Booster Pump-Motor-Engine datasheet Annexure 2 –D: Sea Water Intake Pump – Diesel Engine datasheet
	Annexure 3- Motor Specification
	Annexure 4-Price bid Format Annexure 4 –A: Hydrant-Spray Pump & Engine Assembly Price bid Format Annexure 4 –B: Jockey Pump-Motor Assembly Price bid Format

	Annexure 4 –C: Booster Pump-Motor & Engine Assembly Price bid Format Annexure 4 –D: Sea Water Intake Pump-Engine assembly Price bid Format
	Annexure 5 –A: Hydrant-Spray Pump assembly Checklist Annexure 5 –B: Jockey Pump-Motor assembly Checklist Annexure 6 –C: Booster Pump assembly Checklist Annexure 7 –D: Sea Water Intake Pump-Motor assembly Checklist
	Annexure 6-NIL
	Annexure 7 –A: Hydrant-Spray Pump assembly QAP Guide Line & Formats Annexure 7 –B: Hydrant Booster Pump assembly QAP Guide Line & Formats Annexure 7 –C: Spray Booster Pump assembly QAP Guide Line & Formats Annexure 7 –D: Jockey Pump-Motor assembly QAP Guide Line & Formats
	Annexure 8 –A: Hydrant-Spray Pump assembly Experience Record Proforma Annexure 8 –B: Hydrant-Spray Pump assembly Experience Record Proforma Annexure 8 –C: Booster Pump assembly Experience Record Proforma Annexure 8 –D: Sea Water Intake Pump-Engine assembly Experience Record Proforma Checklist
	Annexure 9- Sub-vendor List
	Annexure 10 –A: Hydrant-Spray Pump assembly Master DOC List Format Annexure 10 –B: Hydrant-Spray Pump assembly Master DOC List Format Annexure 10 –C: Booster Pump assembly Master DOC List Format Annexure 10 –D: Sea Water Intake Pump-Engine assembly Master DOC List Format
	Annexure 11- Deviation Format
	Annexure 12- Pre-bid clarification format
	Annexure 13- C&I Specification

DOCUMENTS TO BE SUBMITTED WITH THE BID:

The bidder must submit the following documents along with their bid to enable BHEL to evaluate their offer.

a) Duly filled in Pump-Motor-Diesel Engine datasheet **(Annexure-2A/2B/2C)**

b) Tentative GAD for Pump with Motor & Engine

c) Performance curves for pump

d) Un-priced copy of price in attached BHEL price bid formats **(Annexure-4)** indicating quoted/ not quoted against each row & column.

e) Equipment qualification criteria / PTR / Reference Lists

f) Checklist as per **(Annexure-5)**

g) **Deviation list [if any] as per **(Annexure-11)**

** Bidder shall submit Annexure-11 indicating as ***NO DEVIATION*** along with their offer. Any specific deviations, which are impractical, shall be raised in form of pre-bid queries as per Annexure-12 before submission of Techno Commercial offer.

In case the above-mentioned documents are not submitted with the offer, the offer of the bidder may be liable for technical rejection.

1. INTENT OF SPECIFICATION

This specification specifies the requirement of Design, Engineering, Manufacturing, Assembling, Inspection, Testing at manufacturer's works and Delivery of properly packed and painted **Fire water pumps [Hydrant, Spray, Jockey and Booster Pumps] of Horizontal Type & Sea Water Intake Pump(Vertical Type)** including drives with all accessories as specified in the scope of work and as required for the safe and trouble-free operation of equipment to be installed at site.

2. SPECIAL NOTES TO BIDDERS

2.1 This specification shall be read in conjunction with its enclosures. In case of any discrepancy arising between this specification & its enclosures, the most stringent of all shall be followed and shall over-ride others. Further, if a requirement in this specification or its enclosures, calls for decision of owner/BHEL, it shall be bidder's sole responsibility to clearly bring out the same distinctively in his technical tender offer, so as to enable owner/BHEL to furnish their decision. If such a requirement is not duly addressed by bidder during tender stage and same comes out during order execution stage, it shall be binding on the bidder to comply with the decision furnished by owner/BHEL then, without any cost, delivery, or any other commercial implications.

2.2 Any additional equipment, material, etc., which are not specifically mentioned here, but are required to make the supplied equipment complete in all respect, in accordance with the intent of this technical specification, contractual agreement, statutory requirements, relevant/applicable codes/standards, good engineering practices, and for safe and trouble-free operation, shall be deemed to be covered under the scope of this specification.

2.3 The Bidder shall accept full responsibility for the completeness and for the faultless working of all the equipment's. These shall be executed on the basis of proven design principle and in accordance with the latest state of the art in such a manner that the purpose to be served by the Pump unit is fulfilled in every respect and a maximum of operational dependability and efficiency are assured. Standardization of equipment, materials etc. shall be employed in the design. Care shall be taken to ensure safe operation as well as simplicity of assembling and dismantling of all parts of the plant.

2.4 Bidder shall quote strictly as per the scope of supply and requirements of this specification.

2.5 Bidder offer shall be strictly as per these specification requirements. Unsolicited or Alternate offers from the bidders will not be entertained.

2.6 In case bidder feels that it is necessary to exclude some components of scope of supply or some of the features of specification requirements due to any technical constraints, bidder shall bring the same to the notice of purchaser during pre-bid stage and take their prior approval before submission of their bid.

2.7 Incase Bidder is unable to offer due to any specific requirement of specification, Bidder shall bring out the same in their regret letter. Otherwise it will be considered that non

participation by the bidder is attributable to reasons other than any specification requirements.

3. PROJECT INFORMATION

	Owner	TAMIL NADU GENERATION AND DISTRIBUTION CORPORATION (TANGEDCO)
1.	Project	2 X 660 MW TANGEDCO UDANGUDI STPP, STAGE-1
2.	Owner's consultant	--
3.	Location	Thoothukudi
4.	Nearest Airport	Vagaikulam (approx.60 kms from site)
5.	Nearest Railway Station	Thiruchendur (approx.12 kms from site)
6.	Access to site	East Coast Road – State high way (176)
7.	Co-ordinates	As per geographical location
8.	Maximum dry bulb temperature (deg. C)	41
9.	Minimum dry bulb temperature (deg. C)	17
10.	Dry Bulb Temperatures (deg. C)	Later
11.	Design Ambient Temperature (deg.C)	Later
12.	Design Ambient for Electrical equipment / system (deg. C)	50 deg C
13.	Relative Humidity	95 %
14.	Design AMB Humidity	Later
15.	Seismic coefficient	Seismic zone II as per IS 1893 Latest
16.	Altitude	Finished grade level (FGL) shall be RL (+) 3.300 m above MSL

Note: Any data required for designing the equipment, bidder may ask prior to the submission of bid.

4. APPLICATION OF SYSTEM

3 Nos of Electric motor driven Hydrant Water Pump (Centrifugal, Horizontal type) is envisaged for supplying water to Hydrant header from the fire water storage sump.

2 Nos of Diesel Engine driven Hydrant Water Pump (Centrifugal, Horizontal type) is envisaged for supplying water to Hydrant header from the fire water storage sump.

1 No of Electric motor driven Spray water Pump (Centrifugal, Horizontal type) is envisaged for supplying the water to the spray water system from the Fire water storage sump.
1 No of Diesel Engine driven Spray water Pump (Centrifugal, Horizontal type) is envisaged for supplying the water to the spray water system from the Fire water storage sump.

2 Nos of Electric motor driven Jockey Pump (Centrifugal, Horizontal type) for Hydrant-Spray System are envisaged for replenishing the level of water in the Hydro Pneumatic tank by supplying water from Fire water storage sump.

1 No of Electric motor driven Booster Pump (Centrifugal, Horizontal type) for Spray System are envisaged for to boost the water pressure to meet the TAC requirements at the highest level in Boiler.

1 No of Diesel Engine driven Booster Pump (Centrifugal, Horizontal type) for Spray System are envisaged to boost the water pressure to meet the TAC requirements at the highest level in Boiler.

1 No of Diesel Engine driven Sea Water Intake Pump (Centrifugal, Vertical Type) for supplying fire water to the coal stockpile area ring main header for fighting large coal stockpile fire

5. TECHNICAL DETAILS/REQUIREMENTS

5.1. Design Parameters of the Hydrant and Spray water Pump [Horizontal, Centrifugal type, Side Suction and Side discharge]

Sl. No.	Description	Unit	Rated Condition
1	Temperature Of Fluid	Deg. C	Ambient
3	Capacity Of each pump	m3/hr	410
4	Pump Differential Head(At Discharge Flange)	mWC	120
5	Available Pressure at Center line of Suction nozzle of Pump	Kg/cm^2 (a)	1.0 kg/cm2
6	NPSHA at pump suction flange	mlc	10.0 m
7	Margin between $NPSH_A$ & $NPSH_R$		1 m at rated condition & NPSHR shall be less than NPSHA at the end of the curve condition.

5.2. Design Parameters of the Jockey Pump [Horizontal, Centrifugal type, End Suction and Back Pullout]

Sl. No.	Description	Unit	Rated Condition

1	Temperature Of Fluid	Deg. C	Ambient
3	Capacity Of each pump	m3/hr	40
4	Pump Differential Head(At Discharge Flange)	mwc	120
5	Available Pressure at center line of Suction nozzle of Pump	Kg/cm2 (a)	1.0 kg/cm2
6	NPSHA at pump suction flange	mlc	10.0 m
7	Margin between NPSHA & NPSHR		1 m at rated condition & NPSHR shall be less than NPSHA at the end of the curve condition.

5.3. Design Parameters of Booster Pump [Horizontal, Centrifugal type, Side Suction and Side discharge]

Sl. No.	Description	Unit	Rated Condition
1	Temperature Of Fluid	Deg. C	Ambient
3	Capacity Of each pump	m3/hr	171
4	Pump Differential Head(At Discharge Flange)	mwc	45
5	Available Pressure at center line of Suction nozzle of Pump	Kg/cm2 (a)	15.8 kg/cm2 [max] * Indicative value, However Available pressure at center line of suction nozzle =Main SPray Pump Shut off head + maximum 5% Positive tolerance on shut off head + suction pressure
6	NPSHA at pump suction flange	mlc	80 m to 120.0 m
7	Margin between NPSHA & NPSHR		1 m at rated condition & NPSHR shall be less than NPSHA at the end of the curve condition.

5.4. Design Parameters of the Sea Water Intake Pump [Vertical Turbine, Centrifugal]

Sl. No.	Description	Unit	Rated Condition
1	Temperature Of Fluid	Deg. C	Ambient
3	Capacity Of each pump	m3/hr	410

4	Pump Differential Head(At Discharge Flange)	mwc	105
5	Minimum Water Level	M	1.5 [max] from the invert level.
6	Margin between NPSHA & NPSHR		1 m at rated condition & NPSHR shall be less than NPSHA at the end of the curve condition.

6. SCOPE OF SUPPLY

The scope of supply for this enquiry is as given below:

Please refer to the enclosed P&ID for Hydrant, Spray water Pumps and Jockey Pump (Annexure-1) for general clarity on scope of supply. The system shall be provided as per annexure-1 taking into all requirements including for testing, painting, documentation, sub vendor list, equipment specifications etc., specified in this specification and enclosures.

Quantity of Pump & Drive Assembly:

(i) 5 Nos. of Hydrant Water Pump [3 No. of Motor Driven & 2 No. for Engine Driven]
3 Nos of Motors are excluded from bidders scope. These motors shall be directly supplied to site by BHEL.

(ii) 2 Nos. of Spray Water Pump [1 No. of Motor Driven & 1 No. for Engine Driven]
1 No. of Motor is excluded from bidders scope. This motor shall be directly supplied to site by BHEL.

(iii) 2 Nos. of Jockey Pump [Motor Driven]

(iv) 2 Nos. of Booster Pump [1 No. of Motor Driven & 1 No. for Engine Driven]

(v) 1 No. of Sea Water Intake Pump(Diesel Engine Driven)

The scope of supply for each pump & motor/ Diesel Engine drive assembly is as given

6.1. Pump

A) Hydrant, Spray pump shall be Horizontal Centrifugal, Side Suction and side discharge type complete with all accessories as per specification.
Elevation of vent nozzle of pump from the bottom of the base plate shall not be more than 2300mm.

B) Jockey Pump shall be Horizontal Centrifugal, End Suction and back pull out type complete with all accessories as per specification.

C) Booster pump shall be Horizontal Centrifugal, Side Suction and side discharge type complete with all accessories as per specification.

D) Sea Water Intake Pump shall be Vertical Turbine, Centrifugal type complete with all accessories as per specification.

Performance requirement, Design and construction of the pump shall be guided by the TAC recommendations & as per enclosed specification. (Also Refer Annexure-2A/2B/2C/2D for more details).

6.2. Drives for pumps [Motor/Diesel Engine]

6.2.1. Motor

HT Motor: [Applicable for main Hydrant-Spray Pumps]

5 Nos of HT Motors (for 3 Nos Hydrant pump & 2 No. Spray pump) are excluded from bidders scope of supply. These motors shall be free issued to vendor and directly supplied to vendor works by BHEL for testing. However, bidder shall consider canopy with legs and other fixing accessories. Further, suitable common base frame for pump and motor assembly shall be provided by bidder for mounting the HT motor at site. Cable, Cable Glands, & Lugs of HT Motors are included from bidder scope of supply.

Note: Bidder to recommend suitable motor rating duly meeting TAC and specification.

LT Motor: [Applicable for Jockey and Hydrant & Spray Booster Pumps]

Suitable drive motor complete with terminal box, canopy, space heater, cable glands and lugs, earthing lugs and all other accessories required shall be provided for motor driven Hydrant booster, Spray Booster and Jockey Pump.

Continuous duty LT motors (rated at 50 deg.C ambient temperature), shall be Premium Efficiency class-IE3, conforming to IS 12615, or IEC:60034-30

Performance requirement, Design and construction of the Motor shall be guided by the TAC recommendations & as per enclosed annexures.

6.2.2. Diesel Engine

6.2.2.1. Performance

Performance requirement, Design and construction of the diesel engine shall be guided by the TAC recommendations and as per enclosed annexures.

i. The continuous engine brake horse power rating (after accounting for all auxiliary power consumption) at the site conditions shall be at least 20% greater than the brake horse power required to drive the pump at its duty point at rated R.P.M. and in no case less

than the brake horse power required to drive the pump at 150% of rated discharge or at any condition of operation of pump.

ii. Deaerating Factors considered by the manufacturer to arrive at the shaft power of the diesel engine at site, shall not be less than as mentioned below:

a. Refer Cl. 11.2.2.4 of NFPA 20(2010 Den), A deduction of 3 percent from engine horsepower rating at standard SAE conditions shall be made for diesel engines for each 1000 ft (300 m) of altitude above 300 ft (91 m).

b. Refer Cl. 11.2.2.5 of NFPA 20(2010 Den), A deduction of 1 percent from engine horsepower rating as corrected to standard SAE conditions shall be made for diesel engines for every 10°F (5.6°C) above 77°F (25°C) ambient temperature.

iii. The base power rating of the diesel engine shall be referred to any accepted datum like BS/SAE Standard condition or equivalent. In any case, horsepower rating shall not be higher than the limit set by Tariff Advisory Committee.

6.2.2.2. Diesel Engine Control Panel

PLC based Diesel Engine Control panel meeting to the requirements of TAC for each engine shall be included in bidder scope of supply. Panel shall be operated on DC Supply, suitably converted by dedicated rectifier bank, redundant transformers from mains A.C supply (230 V). Further, Battery backup shall also be provided along with auto-change over from normal to Battery supply in case of non-availability of Mains supply. 6 Nos [1 first time and 5 Repeat starts] of Kick Starts of Diesel Engine shall be envisaged in the panel.

The Control panel shall be Stand mounted. Bidder to provide suitable stand and all fixing accessories for mounting control panel.

Bidder to submit Soft copy and hard copy of logics executed in PLC for uploading the same by end customer later.

Starting power shall be supplied from two (2) sets of storage batteries. One (1) set of battery is for automatic starting of the engine and the other provided for manual starting. A selector switch shall be provided at the automatic starting control panel to select any of the two (2) sets of battery for manual/auto starting of the engine.

The automatic starting arrangement shall include, as a safeguard, a "Repeat Start" feature so that if the pinion of the starting motor does not engage the flywheel at the first attempt, it is automatically retracted and after a short pause again will advance towards the flywheel.

This repeat start cycle will continue until five (5) kicks after which there will be suitable annunciation.

Arrangement for both trickle and booster charge of the batteries shall be provided. When the engine starts running, provision should be kept to ensure that the charger is automatically disconnected and the battery is charged by engine dynamo.

Each diesel engine shall be provided with two (2) battery charger units of air cooled design. Each charger unit shall be capable of charging one (1) set of battery at a time. Provision shall, however, be kept so that any of the charger units of a particular engine can be utilized for charging any one of the two (2) batteries of that engine.

All cabling [control/signal/power] from engine to control panel, panel to battery and engine to battery selector switch shall be in bidder scope of supply. Control panel, battery charger and battery selector switch is located within 5 m radius of pump skid. However, Pump house layout shall be provided during detail engineering stage. Accordingly, bidder to consider suitable margin on required cabling based on their experience. Bidder to furnish cable BOQ, electrical load list, cable schedule and cable interconnection diagram.

Technical details of local control panel are indicated in **Annexure-13, C&I Specification**.

6.2.2.3. Diesel Engine Fuel Tank

Fuel oil tank having storage capacity sufficient to run the engine at full load for at least six (6) hours, Level transmitter and Level Gauge and required piping [5 m length minimum] & valves [from tank to engine and engine to tank] for engine (as per Annexure-1) shall be included in bidder scope. Valve in the fuel feed pipe between the fuel tank and the engine shall be placed adjacent to the tank and it shall be locked in the open position. Pipe joints shall not be soldered and plastic tubing shall not be used.

Tanks shall be securely mounted on noncombustible supports. Accordingly, bidder to supply Fuel Tank mounting structure, all fixing accessories. Bidder to ensure sufficient leg height for flow of fuel from tank to Engine up to minimum level of fuel and ensuring engine manufacturer's fuel pump static head pressure limits not be exceeded when the level of fuel in the tank is at a maximum.

6.2.2.4. Diesel Engine Fuel Pump

1 No. of suitable 1 phase 230 Volt fuel pump (portable) with ex-proof motor to be supplied to fill up diesel oil from Diesel Drum received from supplier of Diesel.

1 No. of hand operated pump shall be supplied to fill up diesel oil from diesel drum received from supplier of diesel.

Necessary tubing [5m length] from Diesel Engine fuel pump to the fuel tank along with valve (If any) to be supplied by Bidder.

6.2.2.5. Instrumentation & Control

The diesel engine shall be provided with adequate instrumentation. These shall include but not limited to the following :

a) Temperature indicator (contact type) in cooling water inlet and outlet.
b) Temperature indicator in lubricating oil outlet from the oil cooler.
c) Pressure gauges (contact type) for lubricating oil system.
d) Differential pressure gauges (contact type) across strainers/ filters.
e) Speed indicator.
f) Running hour meter.
g) Dip. stick type lubricating oil sump level indicator.
h) Gauge glass type Fuel Oil Tank level indicator.
i) Voltmeter & Ammeter in dynamo type battery charging circuit.

6.2.2.6. Diesel Engine Exhaust System

Bidder to consider 15 m of exhaust piping with silencer & insulation with 6 Nos. of bends. The exhaust piping shall consist of bends, hood, bird screen etc. [For Additional Details please refer Annexure-1, preliminary layout]. Final layout shall be furnished during detailed engg stage.

6.2.2.7. Battery & Battery Charger

i. Two (2) sets (1 working & 1 standby, 100% capacity) of 24 Volt (or 2x12V) Automotive type battery with charger for each diesel engine driven fire water pumps primarily for starting the engine and control power supply to local control panel.

ii. Each engine shall be provided with 2 Nos. Lead-acid plante battery units as per IS. Battery shall be sized to Cater for the following without any charging in between

a. Crank the engine twelve times (12) consecutive starts [each for a duration of 10 sec.] without recharging with a cold engine under full compression,
b. Control panel stand by load requirements for 72 hours.

iii. Arrangement for both trickle and booster charge of the batteries shall be provided. When the engine starts running, provision should be kept to ensure that the charger is automatically disconnected and the battery is charged by engine dynamo.

iv. Each diesel engine shall be provided with two (2) battery charger units of air cooled design. Each charger unit shall be capable of charging one (1) set of battery at a time. Provision shall, however, be kept so that any of the charger units of a particular engine can be utilised for charging any one of the two (2) batteries of that engine.

v. Storage batteries shall be rack supported above the floor, secured against displacement, and located where they will not be subject to excessive temperature, vibration, mechanical injury, or flooding with water. Accordingly, bidder to provide suitable stand/structure for mounting the battery.

All other details shall be as per TAC guidelines.

6.3. Coupling Between Pump and Drives [motor/engine]

Coupling between pump and motor/engine shall comply with the following:

i. Coupling shall be as per as per manufacturer's standard

ii. Couplings shall be of metallic, non-lubricated, flexible element type (i.e. either diaphragm or discs) with spacer [The spacer length shall permit removal of the coupling, bearings, seal and rotor, as applicable, without disturbing the driver or the suction and discharge piping].

iii. All coupling models shall be selected for a minimum service factor of 1.5 over driver rating.

iv. Removable coupling guard shall be provided which shall be fabricated from non-sparking material, and shall be open at the bottom to permit manual shaft rotation.

v. DBSE shall be more than the seal cartridge length.

6.4. Gear Box for Vertical Turbine Pump [Sea Water Intake]

Gear drive conforming to approval standard of Factory Mutual system or right angled gear drive class no 1338 all to be used between pump & Diesel engine. Suitable coupling between Pump & Gear box and between engine & gear box meeting the above cl.no. 6.3 shall be provided by the bidder.

6.5. Base Frame

Common base frame with fixing bolts for each Pump & its drives. The Pumping set(s) shall be securely mounted on a robust bedplate and shall be free from vibration at all Variations of load.

6.6. Mechanical Seal

Cartridge type Mechanical seal as per manufacturer's standard.

6.7. Interconnecting Piping & Instrumentation

Interconnecting piping and instrumentation as per P&I D [Annexure-1]

Reducer/expander, Flanges & Counter flanges with necessary gaskets & bolts at all terminal points as per annexure-1. All counter flanges shall be of weld neck type. Suction Reducer/expander shall be eccentric type.

Pipes: M.S. ERW pipes as per IS-1239, Part – 1 heavy grade (for pipes of sizes 150 mm NB or below) and IS-3589 Gr.410 ERW (for sizes 200 mm NB and above) or equivalent and galvanized as per IS 4736 for pipes normally empty and periodically charged with water and foam system application.

Flanges: ASTM A234 Gr. WPB or ASTM A105 or equivalent.

Fittings: The material shall conform to ASTM A234 Gr. WPB or ASTM A105 or equivalent and dimensional standard conforming to ANSI B 16.9 (socket &threaded type), ANSI B 16.22 (for flanges and flanged fittings).

Fabricated fittings shall not be acceptable up to pipe size of 300 NB. For sizes 350 NB & above, fittings may be fabricated as per BS:2633/BS:534.

The fittings shall be galvanized as per IS: 4736 for galvanized pipe application.

6.8. Necessary Foundation Bolts, Nuts, Shims/Grouting Pads etc.

6.9. Supply of Accessories and Services

Following accessories shall be included in bidder scope:

- **i.** Base Plate
- **ii.** Foundation bolts, nuts, sleeves etc.
- **iii.** Suction & Discharge companion flanges with bolts, nuts & gaskets
- **iv.** Priming connection with 3 way SS isolating valve
- **v.** Priming connection with 3 way SS isolating valve
- **vi.** Vent with 3 way SS isolating valve
- **vii.** Pump-motor coupling and guard
- **viii.** Drain connection with valve
- **ix.** Eyebolts, lifting tackle etc.
- **x.** Canopy with legs for Motors

6.10. Provision for Vibration Probes for Hydrant and Spray Pumps and Drives

Only provision for mounting probes & for mounting key phasor shall be made available on Pumps & Drives.

6.11. BEARING & WINDING INSTRUMENTS & JB FOR PUMPS & DRIVES

6.11.1. For Main Hydrant & Spray Pumps (HT motor driven)

1) 1 No. Duplex platinum resistance type RTD for pump DE
2) 1 No. Duplex platinum resistance type RTD for Pump NDE

6.11.2. For Hydrant & Spray Booster & Jockey Pumps

Bearing & Winding RTDs, JBs for Pump & Drive assembly are not required.

6.11.3. Junction Box

Not applicable.

6.12. Complete Unit Test:

1) Motor driven pump:

All pumps (Hydrant/Spray Pump, Hydrant/Spray Booster Pump and Jockey Pump) shall be tested by Job motor.

It may be noted that, since HT motors for main Hydrant & Spray pumps are exclude from bidder scope of supply, motor shall be free issued to vendor from BHEL for testing at bidder works.

2) Engine driven pump:

All pumps (Hydrant/Spray Pump and Hydrant/Spray Booster Pump) shall be tested by motor and unitized with respective Diesel Engine.

6.13. First Fill of Lubricant

Excluded from bidder scope of supply. However LO schedule shall be furnished by Bidder.

6.14. All Other Items Necessary for Safe And Smooth Running of Pump & Accessories Required to Make The Supplied Equipment Complete in All Respect.

6.15. Commissioning Spares

6.15.1. For Hydrant - Spray Pump & Drives Assembly:

7 sets (One set for each pump & drive assembly) of commissioning spares for Hydrant Pump with drive assembly shall be quoted as per manufacturer's recommendation. Commissioning spares shall contain Minimum 1 Set of O rings & gaskets for each Pump.

One set stands for requirement for one no. of pump & drive assembly. Bidder to furnish the list along with the offer.

Note: Any commissioning spare required over and above the recommended commissioning spares during commissioning shall be supplied free of cost by the equipment vendor.

Commissioning spares required for HT Motors are excluded from bidder’s scope of supply.

6.15.2. For Hydrant Booster Pump & Drives Assembly:

2 sets (One set for each pump & drive assembly) of commissioning spares for Hydrant Booster Pump with drive assembly shall be quoted as per manufacturer's recommendation. Commissioning spares shall contain Minimum 1 Set of O rings & gaskets for each Pump & 1 Set of Commissioning Spares for Drive as per Manufacturer recommendation.

1 set stands for requirement for one no. of pump & drive assembly. Bidder to furnish the list along with the offer.

Note: Any commissioning spare required over and above the recommended commissioning spares commissioning shall be supplied free of cost by the equipment vendor.

6.15.3. For Spray Booster Pump & Drives Assembly:

2 sets (One set for each pump & drive assembly) of commissioning spares for Spray Booster Pump with drive assembly shall be quoted as per manufacturer's recommendation. Commissioning spares shall contain Minimum 1 Set of O rings & gaskets for each Pump & 1 Set of Commissioning Spares for Drive as per Manufacturer recommendation.

1 set stands for requirement for one no. of pump & drive assembly. Bidder to furnish the list along with the offer.

Note: Any commissioning spare required over and above the recommended commissioning spares commissioning shall be supplied free of cost by the equipment vendor.

6.15.4. For Jockey Pump & Motor Assembly:

2 Set (One set for each pump & motor assembly) of commissioning spares for Jockey Pump with Motor shall be quoted as per manufacturer's recommendation. Commissioning spares shall contain Minimum 1 Set of O rings & gaskets for each Pump & 1 Set of Commissioning Spares for Drive as per Manufacturer recommendation.

One set stands for requirement for one no. of pump & drive assembly. Bidder to furnish the list along with the offer.

Note: Any commissioning spare required over and above the recommended commissioning spares commissioning shall be supplied free of cost by the equipment vendor.

6.16. Mandatory Spares:

6.16.1. For Hydrant - Spray Pump with drive assembly

1) For Hydrant - Spray Pump-Pump

S.No.	Description	Quantity
1.	IMPELLER	1 NO. OF EACH TYPE AND SIZE
2.	PUMP BEARINGS	1 NO. OF EACH TYPE AND SIZE
3.	PUMP SHAFT	1 NO. OF EACH TYPE AND SIZE

4.	BEARING RINGS(IF APPLICABLE)	2 SET. OF EACH TYPE AND
5.	SHAFT SLEEVES	2 SET. OF EACH TYPE AND
6.	BUSHINGS	2 SET. OF EACH TYPE AND
7.	BEARING HOUSING (IF PROVIDED)	2 SET. OF EACH TYPE AND
8.	COUPLING AND NUTS (WITH BUSHES)	2 SET. OF EACH TYPE AND

2) **For Hydrant - Spray pump - Motor**: Not in bidder scope of supply

3) **For Hydrant - Spray pump - Engine**

S.No.	Description	Quantity
1.	FUEL INJECTION NOZZLE	2 SET. OF EACH TYPE AND SIZE
2.	PISTON RING	1 COMPLETE SET FOR EACH CYLINDER.
3.	FUEL FILTERS ELEMENTS AND SEALS	2 SETS
4.	LUBRICATING OIL FILTER ELEMENTS & SEALS	2 SETS
5.	ENGINE JOINTS, GASKETS AND HOSES	1 SETS
6.	INLET VALVE	1 NO.

4) **For Hydrant - Spray pump – Panel**
Not Applicable.

5) **For Hydrant - Spray pump – Instrumentation**
Not Applicable.

6.16.2. For Booster Pump with drive assembly

i. For Booster Pump-Pump

S.No.	Description	Quantity
1.	IMPELLER	1 NO. OF EACH TYPE AND SIZE
2.	PUMP BEARINGS	1 NO. OF EACH TYPE AND SIZE
3.	PUMP SHAFT	1 NO. OF EACH TYPE AND SIZE
4.	BEARING RINGS(IF APPLICABLE)	2 SET. OF EACH TYPE AND
5.	SHAFT SLEEVES	2 SET. OF EACH TYPE AND
6.	BUSHINGS	2 SET. OF EACH TYPE AND
7.	BEARING HOUSING (IF PROVIDED)	2 SET. OF EACH TYPE AND
8.	COUPLING AND NUTS (WITH BUSHES)	2 SET. OF EACH TYPE AND

ii. For Booster Pump-Motor

Not Applicable.

iii. For Booster Pump – Engine

S.No.	Description	Quantity
1.	FUEL INJECTION NOZZLE	2 SET. OF EACH TYPE AND SIZE
2.	PISTON RING	1 COMPLETE SET FOR EACH CYLINDER.
3.	FUEL FILTERS ELEMENTS AND SEALS	2 SETS
4.	LUBRICATING OIL FILTER ELEMENTS & SEALS	2 SETS
5.	ENGINE JOINTS, GASKETS AND HOSES	1 SETS
6.	INLET VALVE	1 NO.

iv. For Hydrant Booster pump – Panel

Not Applicable

v. For Hydrant Booster pump – Instrumentation

Not Applicable

6.16.3. For Jockey Pump with drive assembly

1) For Jockey Pump-Pump

S.No.	Description	Quantity
1.	FUEL INJECTION NOZZLE	2 SET. OF EACH TYPE AND SIZE
2.	PISTON RING	1 COMPLETE SET FOR EACH CYLINDER.
3.	FUEL FILTERS ELEMENTS AND SEALS	2 SETS
4.	LUBRICATING OIL FILTER ELEMENTS & SEALS	2 SETS
5.	ENGINE JOINTS, GASKETS AND HOSES	1 SETS
6.	INLET VALVE	1 NO.

2) For Jockey pump - Motor

Not Applicable

Special notes for Mandatory spares:

i. The word "set" means the quantity required for full replacement of that part in one machine.
ii. The word "TYPE" means the Make, Model no., Type, Range, Size/ Length, Rating, Material as applicable.
iii. Wherever % age is identified, bidder shall supply next rounded figure.
iv. Part Description is the commonly used name of the part and may vary from manufacturer to manufacturer.
v. Mandatory spares as indicated above do not cover commissioning spares.
vi. Mandatory spares as indicated above do not cover two year O&M spares.
vii. All Mandatory spares should be supplied separately with green color painted box.
viii. Loose items sent by Vendor to sites shall be quantified/numbered/tagged and not merely mentioned as ONE lot of loose items.
ix. A packing list covering items having shelf life are to be intimated to site. In addition, shelf life items shall be packed separately in black color painted box for easy identification at site.
x. Spare rotors shall be boxed in a metal containers for vertical storage with nitrogen purging. Storage container shall be property of the owner.

6.17. Auxiliaries Equipment's/Spares

Bidder to include all auxiliary equipment [clause no 7.4.5.7.3 of TAC] & spares [7.4.5.11 of TAC] as per TAC in addition to above mandatory spares.

6.18. Special Tools And Tackles

6.18.1. For Hydrant - Spray pump with drives:

The bidder shall furnish a complete 7 sets [1 set each for Pumps with Drive assembly] of all special tools, wrenches etc. with necessary tools boxes as required for operation and maintenance [disassemble, assemble, or maintaining the unit] of the Hydrant and Spray Pump supplied, as a part of scope of supply. Bidder shall furnish a list of such tools along with offer for the system. Prices for the special tools and tackles shall be part of main scope of supply. No separate price shall be offered for the same.

Special Tools and tackles required for HT Motors (for Hydrant and Spray Pump) are excluded From bidder scope of supply.

6.18.2. For Booster pump with drives:

The bidder shall furnish a complete 2 sets [1 set each for Pumps with Drive Motors & Pumps with Diesel Engines] of all special tools, wrenches etc. with necessary tools boxes as required for operation and maintenance [disassemble, assemble, or maintaining the unit] of the

Hydrant Booster water Pump supplied, as a part of scope of supply. Bidder shall furnish a list of such tools along with offer for the system. Prices for the special tools and tackles shall be part of main scope of supply. No separate price shall be offered for the same.

6.18.3. For Jockey pump with drives:

The bidder shall furnish a complete 2 sets [1 set each for Pump with drive assembly] of all special tools, wrenches etc. with necessary tools boxes as required for operation and maintenance [disassemble, assemble, or maintaining the unit] of the Jockey Pump supplied, as a part of scope of supply. Bidder shall furnish a list of such tools along with offer for the system. Prices for the special tools and tackles shall be part of main scope of supply. No separate price shall be offered for the same.

6.18.4. Supervision of Erection & Commissioning:

Supervision of erection, commissioning of the supplied system shall be included in bidder's scope of service.

Bidder to note that the supervision charges for erection & commissioning shall consists of the
following:

- Per day supervision charges of an Engineer including all other expenses like boarding, lodging, local travel, insurance etc.
- Travel expenses (inclusive of any clearance charges like Visa fee etc, insurance) from to vendor works to site.

Per diem charges shall be applicable from the day bidder's representative reports to site, up to the day certified by BHEL's site.

For the purpose of tender following to be considered: [for details pl. refer price bid format].

1) **For Hydrant-Spray Pump Drive assembly:**
   2 days for 1 No of Pump
   2 days for 1 No of Engine
   1 visit for 1 no of Pump
   1 visit for 1 no of Engine

2) **For Booster Pump Drive assembly:**
   2 days for 1 no of Pump
   2 days for 1 no of Motor
   2 days for 1 no of Engine
   1 visit for 1 no of Pump
   1 visit for 1 no of Motor
   1 visit for 1 no of Engine

3) For Jockey Pump Drive assembly:

2 days for 1 no of Pump
2 days for 1 no of Motor
1 visit for 1 no of Pump
1 visit for 1 no of Motor

Notes:

i. However, either or both of the number of man days or number of visits may change on either side based on the actual site requirement.
ii. All payments towards supervision of E&C shall be made only after BHEL-site certification.
iii. Bidder to mobilize concerned competent person for supervision of Erection & commissioning activities within a period of 7 days of receipt of intimation in this regard by BHEL.
iv. Bidder to quote supervision of erection and commissioning activities strictly as per BHEL's price format

6.18.5. Conflicts in Specification Requirement:

In case of any conflict between this specification and Annexures stringent of the requirement will govern.

7. OPTIONAL PRICES

Please Refer to Attached Price Bid Format. Bidder to furnish the following as optional prices:

Bidder to furnish optional prices for 2 year recommended spares as per equipment manufacturer's recommendations. [The Bidder shall quote separately with optional price for the recommended list of spare parts for operation, with recommended quantities for the equipment covered under this specification. Bidder shall furnish such a list along with offer. The list of spares shall be as per Bidder's experience.]

8. EQUIPMENT QUALIFICATION CRITERIA (EQC)

The bidder shall be an established manufacturer of Horizontal Centrifugal design pumps for Fire Protection System & having adequate engineering, manufacturing & testing facilities for pumps confirming to the relevant HIS, IS-5120, IS-6595 Part-2/Equivalent Standard & Comply with the regulations of Tariff Advisory Committee (TAC)/LPA India or Oil industry safety directorate (OISD) or any other International reputed authority (like LPC-UK or NFPA, USA). The pump model offered shall be from the existing regular manufacturing range of bidder.

The offered pump model shall meet the minimum service & manufacturing experience specified as below:

Bidder should have engineered, manufactured, tested, supplied and commissioned at least SIX (06) nos. of identical or similar packages (or higher capacity packages) in terms of Flow, Differential Pressure, Material of construction(CS/CI/SS), speed in the last Ten years and at least Three (3) of these pumps shall have supplied and commissioned and kept in trouble free operations for the past 5 years as on 31st Dec 2017. Vendor to give documentary evidence for the same. **As a proof for the same, Date of Supply/ Commissioning report/Customer Satisfaction report will be considered and same to be provided by Bidder.**

Bidders shall furnish the details as per the below mentioned table along with technical offer for assessment of Bidder with reference to PQC indicated as above.

Bidder to furnish dully filled in proforma as per Annexure-8.

9. QUALITY PLAN & INSPECTION AGENCY & TESTING

For details, pl refer annexure-4&7.

9.1. Quality Plan

Quality plan will be reviewed during detailed Engineering stage with respect to Inspection, standard Engineering practices & Specification Requirements and various tests and stages of inspection and appropriate agencies for Inspection will be Intimated. Bidder to abide by the same.
For guidelines & format: Refer **Annexure-7**.

9.2. Inspection Agency

BHEL/Third Party appointed by BHEL/Customer.
The various review/witness/observation stages by individual agencies (or) Group of Agencies as above will be in line with approved quality plan. Also refer Annexure-07.

9.3. Testing

The design and Testing Standards of the Pumps shall conform to the standards as indicated in the TAC recommendation.

However, Performance tolerance shall be as mentioned below:

- **i.** Rated head at rated flow: Zero negative tolerance
- **ii.** Shut-off head: Zero negative tolerance. 5% Positive tolerance permitted.
- **iii.** Permissible tolerance in efficiency at rated capacity: No negative tolerance
- **iv.** Rated BKW: Zero positive tolerance. Positive tolerance permitted till motor rating meets end of the curve condition.

v. Performance tests are to be conducted to cover the entire range of operation of the pumps. These shall be carried out to span 150% of rated capacity up to pump shut-off condition.

10. PAINTING

Painting for Pump, Motor, Engine and all other accessories shall be as follows:

Surface Preparation: Blasting according to SIS 055900 grade Sa 2½. Depending on production flow, a weldable, inorganic ethyl zinc silicate shop primer of minimum dry film thickness 25 µm may be used.

Painting Scheme:

At Shop:

a) Primer: 01 Coat of Catalysed Zn rich Primer with a VS of 60% min, complying to SSPC Paint 20 level 2.

Film Thickness: Min. 75 micron DFT/Coat (Total)

~~Total Film Thickness: Min. 60 microns~~

~~b) Intermediate Paint: A two pack air drying high build epoxy resin based paint with MIO.~~

~~Film Thickness: Min. 80 microns/DFT~~

c) Finish Paint: (2) finishing coats of chlorinated rubber paint.

Two component High Build high Solid Aliphatic Amine Cured Epoxy coating. - Min VS 85%.

Film Thickness: 100 microns DFT each coat

~~**At Site**:~~

~~Thorough cleaning to remove oil, grease, dirt and any other contaminants. Derusting of all mechanical damages according to SIS 055900 Grade ST3. Touch up with dry film thickness 50 µm.~~

Pump:

Final Color: Fire Red, 536 as per IS 5

Motor:

Painting shall be as specified in relevant TAC/IEC/IS standards.

Final Color: Fire Red, 536 as per IS 5

Engine:

Painting shall be as specified in relevant TAC/IS standards.

Final Color: Fire Red, 536 as per IS 5

Fuel tank for diesel engine driven pump:

Final Color: Fire Red, 536 as per IS 5

Painting for Pump, Motor, Engine and all other accessories shall be as per annexure -6.

Final shade for Pump, Motor and Engine shall be informed during detail engineering stage.

11. PACKING AND FORWARDING

Bidder to note that Packing and Forwarding shall be as per manufacturing standard meeting the requirement is acceptable. Packing shall be suitable for outdoor storage: More than 6 months. For details Pl. refer Annexure -4.

12. SUB VENDORS

HT Motors: BHEL-Bhopal [Free issue to vendor at vendor works]

Bidder shall follow sub vendors list enclosed as Annexure-8. In case of any specific practical difficulty, bidder is requested to bring out the same with proper reason for not following vendor list. For other items for which sub vendors are not specified, bidder can follow their standard vendors. However, they have to ensure the Proven Track record of the sub vendors and Bidder to take prior approval of BHEL for the same.

13. DOCUMENTATIONS

Please refer to enclosed Master Documentation List [MDL] for the list of DOCUMENTS / DRAWINGS to be submitted by the bidder as part of documentation. Bidder shall ensure submission of all documentation as per the MDL, Annexure: 9.

Bidder to note that the dates of submission of all the documents shall be finalized based on PO date. It shall be solely bidder's responsibility to get approval on the entire document from purchaser to meet project schedule.

DEFINITION OF VENDOR DOCUMENT REVIEW STATUS ASSIGNED BY BHEL

The guidelines listed below are followed in assigning the document status code to the vendor documents: Final submittal of vendor documents will not be required as long as the document status code is 1 or 4 and the "AS-BUILT" condition of the component agrees with the current document.

Permission to proceed does not constitute acceptance or approval of design details, calculations, analyses, test methods, or materials developed or selected by the vendor and does not relieve the vendor from full compliance with contractual obligations.

Code-1: Work may proceed

The document conforms to procurement document requirements. The document requires no changes or additions. Matters remaining to be resolved do not require document change and will be handled by correspondence. Where it is known that the design information on a vendor document is not complete and re-submittals will be required, e.g., due to "hold" areas, the document is assigned another status code.

Code-2: Revise and resubmit

Work may proceed subject to resolution of indicated comments. The document is in basic conformance with procurement document requirements. Minor deviations from procurement document requirements have been noted or other minor technical or physical changes in the equipment are required. The vendor shall resolve comments and resubmit documents prior to shipment of commodity.

Code-3: Rejected. Revise and resubmit

The document:

- Does not conform to the procurement requirements,
- Is of a design that is technically unacceptable without significant changes,
- Does not meet project requirements, i.e., orientation of equipment, nozzles, conduit connections, etc.,
- Does not conform to project criteria or with proposal documents or data, or
- Does not meet minimum submittal requirements.

This submittal rejection does not relieve vendor of any schedule commitments.

Code-4: Review not required

The document is not subject to BHEL review. Typical uses for this status are in the review of items that are vendor standard products, small internal parts of major equipment, or vendor standardized data.

DRAWINGS REVIEW & APPROVALS:

Each drawing submitted by the bidder shall be with a title bock furnished by BHEL during detailed engg stage.

All drawings / documents shall be thoroughly checked, duly signed, and stamped by the vendor including drawing /documents of sub-vendor, before submission to BHEL. Documents, which are unchecked, unsigned, and without revisions marked clearly, shall be

returned without review. Any delay on account of this shall be to the vendor's account. After first review of documents, vendor to submit all the further revisions of documents along with comment resolution sheet. Successive documents submitted without comment resolution sheet shall be returned without review.

The approval and /or review by BHEL /End customer shall not be construed by the bidder as limiting any of his responsibilities and liabilities for mistakes and deviations from the requirements, specified under these specifications and drawings.

Documents once reviewed in Code-1 shall not be submitted (incorporating some changes) again for review, however if some change is really necessary, the same shall be brought to the notice of BHEL separately through design change note for review / information. Finally, As –built drawings, duly updated, shall be submitted.

During detailed engg stage, BHEL shall furnish check list reg minimum contents in GA drawing. Bidder to submit GAD [duly incorporating all requirements as per the check list] along with signed checklist. GAD shall not be reviewed without duly filled in checklist signed by the bidder.

NO. OF COPIES OF EACH DOCUMENT TO BE FURNISHED:
All the documents shall be submitted as given below:

SL NO.	DESCRIPTION	NO. OF COPIES / PIECES TO BE SUBMITTED	WHEN TO SUBMIT
1)	Initial drawings/documents under approval and information	Soft copy only	Within 2 weeks of placement of order
2)	BHEL shall furnish their observation on submitted documents	Soft copy only	Within 2 weeks of document submission
3)	*Revised drawings/documents along with compliance sheet incorporating all BHEL comments. **Vendor to incorporate all BHEL comments so that further revisions can be minimized.*	Soft copy only	Within 1 weeks of receipt of commented Drawings from BHEL
4)	BHEL shall furnish their observation on submitted documents	Soft copy only	Within 2 weeks of document submission
5)	Final Drawings/documents	12	Within 2 months of placement of order.

6)	Erection Documentation	5	1 month before dispatch of equipment. The list of documents identified under master document list for erection to be furnished in 5 no's of folders
7)	Draft O & M Manuals for BHEL review. Note: *Bidder to furnish final hard copy of O&M only after getting concurrence on soft copy.*	Soft copy	At least 2 months before the delivery date of equipment
8)	Revised O & M Manuals with Test Certificates to be submitted to BHEL (Hyderabad)	12	Within one month before the delivery date of equipment
9)	Final O&M manuals in a CD	4	Within one month after dispatch of equipment after BHEL concurrence on soft copy.

Notes:

The O&M manuals shall contain the following as minimum:

a) The identification details of the equipment like BHEL P.O. No., Vendor's Job Identification No., full contact address with telephone, fax, & e-mail details.
b) Brief description of the system.
c) All approved documents [Drawings, documents & test procedures as per MDL]
d) Bill of material, BBU, LO schedule, sub vendor list, Mandatory & commissioning spares list etc.
e) Operation, Instruction & maintenance manuals of all equipments / items fo the complete package
f) System unloading, storage erection, start up, commissioning, shut down requirements.
g) Operational & environmental safety instructions.
h) Test reports and certificates.
i) Catalogues of the equipment & instrumentation.

14. PRICE BID FORMAT

Bidder to indicate his offer as per Price Bid format enclosed as Annexure-3A, 3B, 3C & 3D.

All the items included in the price bid format shall be quoted as per tender specification and pre-bid clarifications as per annexure-11, if any. Responsibility of ensuring correctness & completeness of scope of supply as per specification requirement solely lies with bidder.

The equipment supplied shall be complete in all respects. The bidder shall not be eligible for any extra payment in respect of such mountings, fittings, fixtures and accessories if required for the safe and reliable operation of the equipment. Any additional equipment, material, etc., which are not specifically mentioned here, but are required to make the supplied equipment complete in all respect, in accordance with the intent of this technical specification, contractual agreement, statutory requirements, relevant/applicable codes/standards, good engineering practices, and for safe and trouble-free operation, shall be deemed to be in bidder scope Only.

Main offer consists of those items, which will be part of main order after successful bidder is identified. Optional Items consists of those items, which need to be quoted by bidder but may or may not be ordered by BHEL. Bidders are instructed to provide the pricing details listed under Main offer and Optional items as per the prescribed format. Prices quoted by the bidder shall remain firm till the successful handing over of the entire package to end customer. Any request for upward revision of price during any intermediate stage before handing over the plant to end customer will be summarily rejected by BHEL.

The Priced Bid shall be submitted in Original (without any copy) duly signed and stamped on each page in a separate sealed envelope super scribing “Price Bid –Do not Open” This shall not contain any condition whatsoever failing which the Bids shall be liable to be rejected. In case of any correction, the bidder shall put its signature and its stamp. Eraser fluid will not be allowed for making any correction.

Bidder shall confirm to the un-priced bid as part of their offer.

15. PRE-BID CLARIFICATIONS

Bidders shall comply with various requirements of this specification. It may please be noted that the requirements specified here in this specification are the standard practices being followed by the bidders. However, same things are presented in a structured form so that it can be ensured that the requirements of ultimate customer are complied with.

Bidders can bring out only those deviations which are impractical to meet, for our review in pre bid clarification only.

Bidders may also please note that the data sheets for valves, instruments etc., submitted along with the offer will be considered as indicative only, as the requirements specified in the specification are standard in nature. These will not be reviewed by BHEL before award of contract. Same will be reviewed during order execution stage in line with the requirements of specification and agreed deviations.

All pre-bid clarifications & deviations shall be clear bring as per Annexure 11 only.

In case bidder doesn’t bring any clarification/deviation in prebid stage, the same shall be brought in their offer with following conditions:

- **VARIANT TABLE:**

Variant	Item	Material Code
01	Hydrant Pump with Drive Motor	PY9751497019
02	Spray Pump with Drive Motor	PY9751497027
03	Hydrant Pump with Diesel Engine Drive	PY9751497035
04	Spray Pump with Diesel Engine Drive	PY9751497043
05	Jockey Pump with Drive Motor	PY9751497051
06	Booster Pump with Drive Motor	PY9751497060
07	Booster Pump with Diesel Engine Drive	PY9751497078
08	Sea Water Intake with Diesel Engine	PY9751497086
08	Mandatory Spares for Motor and Diesel Engine Driven Hydrant & Spray Pump	PY9751497094
09	Mandatory Spares for Motor Driven Jockey Pump	PY9751497108
10	Mandatory Spares for Motor and Diesel Engine Driven Booster Pump	PY9751497116
11	Mandatory Spares for Motor and Diesel Engine Driven Booster Pump	PY975149712X

RECORD OF REVISIONS				
Rev. No.	**Date**	**Revision Details**	**Revised By**	**Approved By**
00	19.01.19	First Issue	----------	M.Siva Prasad Babu

FIRST ANGLE PROJECTION

(ALL DIMENSIONS ARE IN mm)

ANNEXURE–1

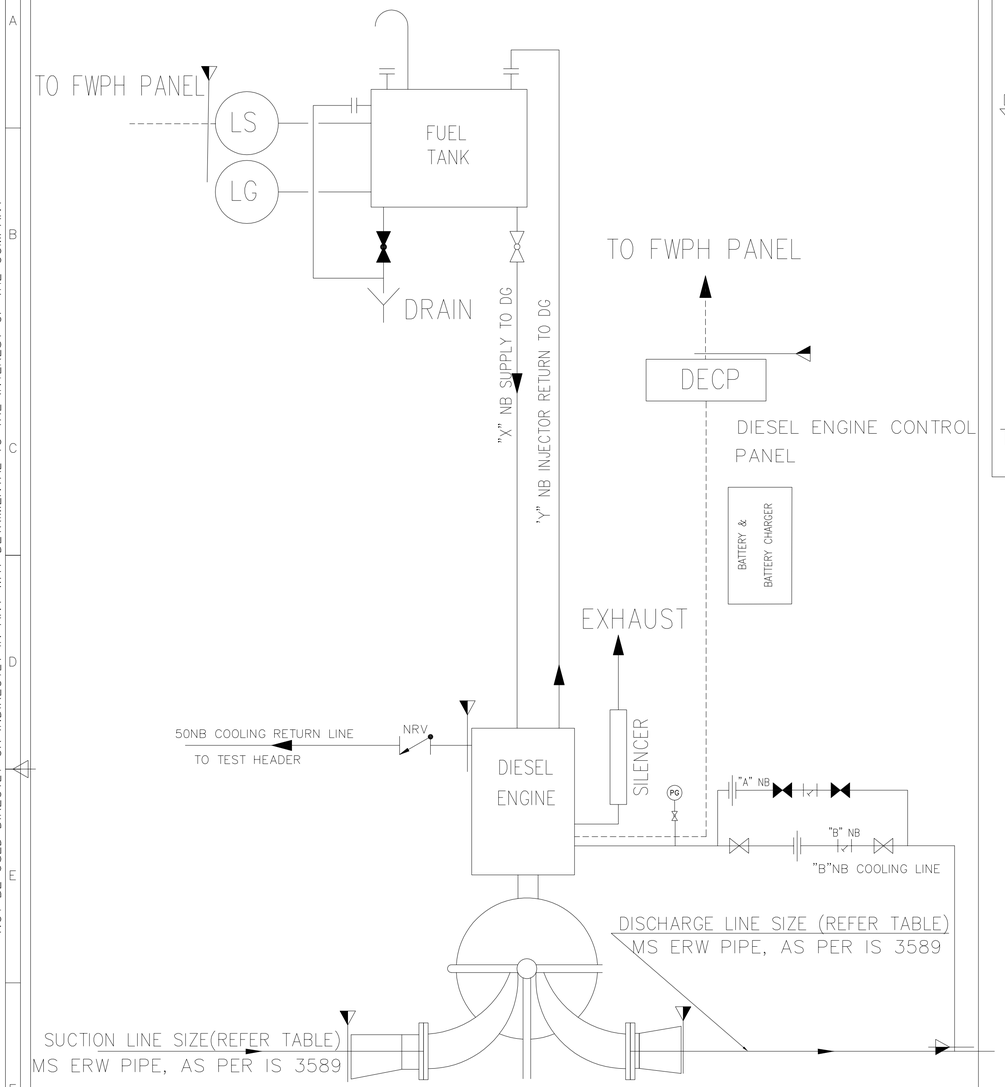

TYP. FOR ENGINE DRIVEN HYDRANT, SPRAY & BOOSTER PUMP

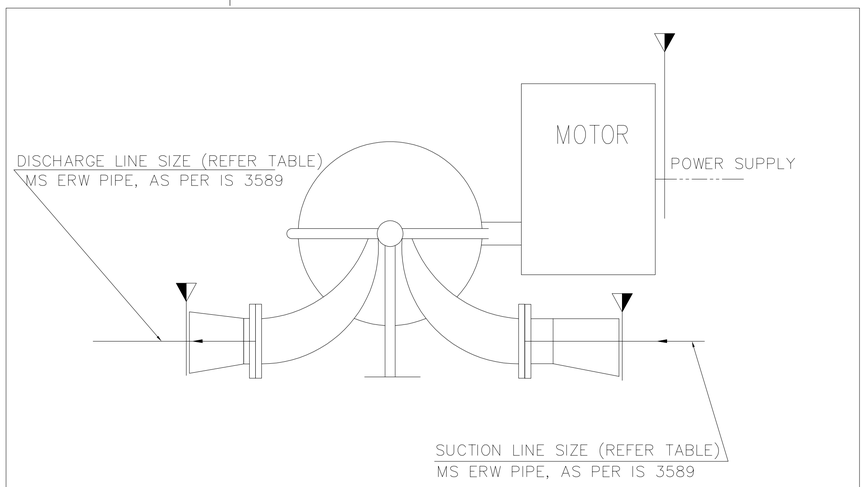

TYP. FOR MOTOR DRIVEN HYDRANT, SPRAY, JOCKET & BOOSTER PUMP

NOTES

1. SCOPE OF BATTERY AND BATTERY CHARGER, DIESEL ENGINE CONTROL PANEL, FUEL TANK,PIPING BETWEEN FUEL TANK TO DIESEL ENGINE,HOSE FROM FUEL PUMP TO DIESEL ENGINE ARE IN SCOPE OF BIDDER'S SCOPE.
2. PUMP ARE OF HORIZONTAL CENTRIFUGAL TYPE. SPLIT CASING TYPE IS INDICATED IN THIS DRAWING. HOWEVER, BIDDER SHALL SELECT SUITABLE AVAILABLE MODEL FOR THIS FIRE WATER APPLICATION MEETING ALL THE TENDER SPECIFICATION REQUIREMENTS.
3. COOLING WATER REQUIREMENT FOR DIESEL ENGINE/PUMP TO BE FED FROM DISCHARGE OF PUMP. ACCORDINGLY THE PUMP RATED FLOW TO BE SELECTED.ALL PIPING INCLUDING VALVES/FITTINGS,INSTRUMENTS ETC FOR COOLING WATER CIRCUIT IS IN BIDDER'S SCOPE.

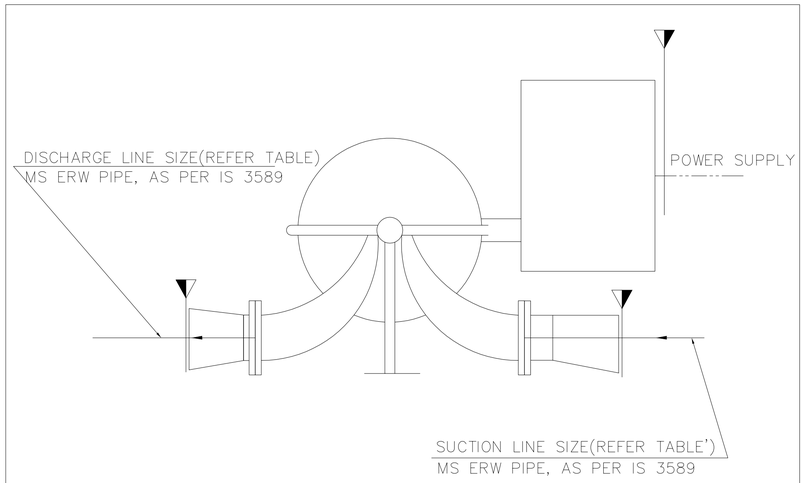

TYP. FOR MOTOR DRIVEN JOCKEY PUMP

TABLE – LIST OF SUCTION AND DISCHARGE NOZZLES

S.NO	PUMP DESC.	SUCTION NOZZLE(NB)	DISCHARGE NOZZLE(NB)
1.	MD HYDRANT & SPRAY PUMP	300NB	250NB
2.	MD HYDRANT & SPRAY PUMP	300NB	250NB
3.	JOCKEY PUMP	100NB	80NB
4	MD BOOSTER PUMP	250NB	200NB
5	DE DRIVEN BOOSTER PUMP	250NB	200NB

NOTE: THIS IS JUST A TYPICAL SCHEMATIC, BIDDER TO SUPPLY ALL THE NECESSARY EQUIPMENTS REQUIRED FOR SMOOTH FUNCTIONING OF PUMP,MOTOR & DIESEL ENGINE AS PER SPECIFICATION.

"X" & "Y"–Based on Manufacturer Recommendation.

"A" & "B"–Based on Manufacturer Recommendation.

SCOPE DEMARCATION

BHEL | BIDDER

CUSTOMER: TAMIL NADU GENERATION AND DISTRIBUTION CORPORATION (TANGEDCO)

PROJECT: 2 X 660 MW TANGEDCO UDANGUDI STPP, STAGE–1

BHARAT HEAVY ELECTRICALS LTD. HYDERABAD

	NAME	SIGN.	DATE	NO.OF VAR.
DRN.	MURALIDHAR	–SD–	19.01.19	N.A.
CHD.	GIRISH PALO	–SD–	19.01.19	
APPD.	MSPB	–SD–	19.01.19	

DEPT.	UNTOL. DIMS. GR.	SCALE	WEIGHT (KG)	REF. TO ASSY. DRG.	ITEM NO.	NO.OF ITEMS
PE&SD CODE 450	g/M/f	N.T.S	N.A.	N.A.	N.A.	N.A.

TITLE: ANNEX–1A: P&ID HYDRANT, SPRAY JOCKEY & BOOSTER PUMPS

CARD CODE: NA

DRG. NO: PESD/UDG/001–1

CUST. DRG. NO. ——————

REV. 00

SHT. No 01 NO. OF SHT. 01

REV.	DATE	ALTERED	CHD/APPD	ZONE

COMPUTER FILE NAME: 3810103930–S01–R01.DWG

REF. DRG. NO. 1391000136

SIGN. AND DATE

INVENTORY NO

THE INFORMATION ON THIS DOCUMENT IS THE PROPERTY OF BHARAT HEAVY ELECTRICALS LIMITED. IT MUST NOT BE USED DIRECTLY OR INDIRECTLY IN ANY WAY DETRIMENTAL TO THE INTEREST OF THE COMPANY

FIRST ANGLE PROJECTION

(ALL DIMENSIONS ARE IN mm)

ANNEXURE–1

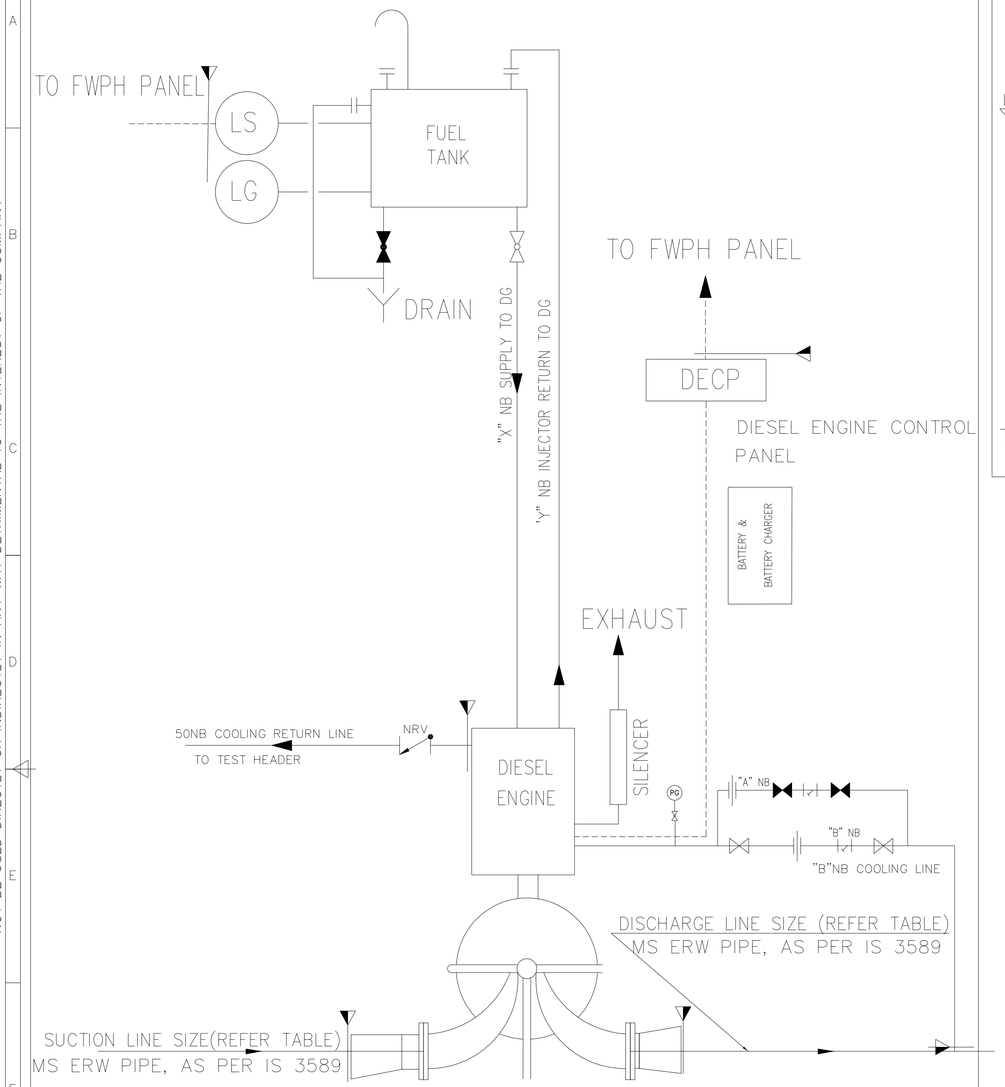

TYP. FOR ENGINE DRIVEN HYDRANT, SPRAY & BOOSTER PUMP

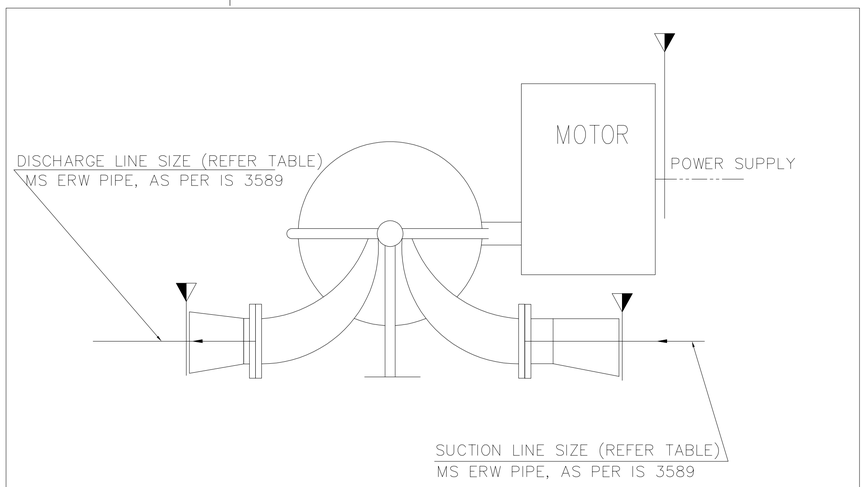

TYP. FOR MOTOR DRIVEN HYDRANT, SPRAY, JOCKET & BOOSTER PUMP

NOTES

1. SCOPE OF BATTERY AND BATTERY CHARGER, DIESEL ENGINE CONTROL PANEL, FUEL TANK,PIPING BETWEEN FUEL TANK TO DIESEL ENGINE,HOSE FROM FUEL PUMP TO DIESEL ENGINE ARE IN SCOPE OF BIDDER'S SCOPE.
2. PUMP ARE OF HORIZONTAL CENTRIFUGAL TYPE. SPLIT CASING TYPE IS INDICATED IN THIS DRAWING. HOWEVER, BIDDER SHALL SELECT SUITABLE AVAILABLE MODEL FOR THIS FIRE WATER APPLICATION MEETING ALL THE TENDER SPECIFICATION REQUIREMENTS.
3. COOLING WATER REQUIREMENT FOR DIESEL ENGINE/PUMP TO BE FED FROM DISCHARGE OF PUMP. ACCORDINGLY THE PUMP RATED FLOW TO BE SELECTED.ALL PIPING INCLUDING VALVES/FITTINGS,INSTRUMENTS ETC FOR COOLING WATER CIRCUIT IS IN BIDDER'S SCOPE.

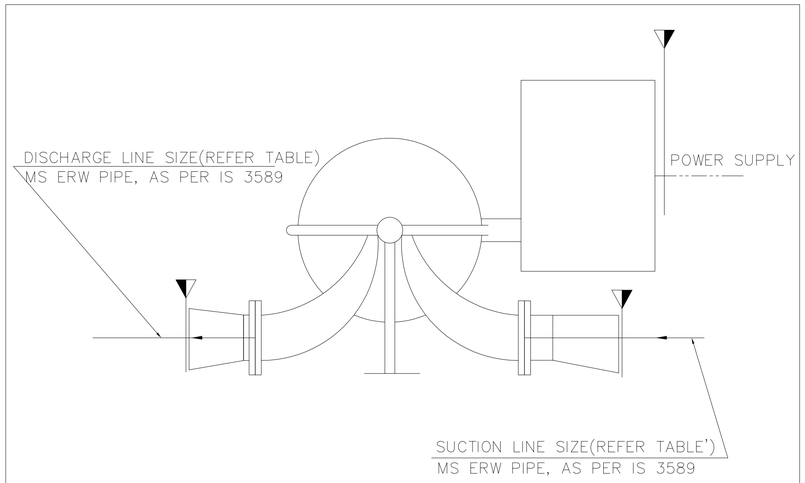

TYP. FOR MOTOR DRIVEN JOCKEY PUMP

TABLE – LIST OF SUCTION AND DISCHARGE NOZZLES

S.NO	PUMP DESC.	SUCTION NOZZLE(NB)	DISCHARGE NOZZLE(NB)
1.	MD HYDRANT & SPRAY PUMP	300NB	250NB
2.	MD HYDRANT & SPRAY PUMP	300NB	250NB
3.	JOCKEY PUMP	100NB	80NB
4	MD BOOSTER PUMP	250NB	200NB
5	DE DRIVEN BOOSTER PUMP	250NB	200NB

NOTE: THIS IS JUST A TYPICAL SCHEMATIC, BIDDER TO SUPPLY ALL THE NECESSARY EQUIPMENTS REQUIRED FOR SMOOTH FUNCTIONING OF PUMP,MOTOR & DIESEL ENGINE AS PER SPECIFICATION.

"X" & "Y"–Based on Manufacturer Recommendation.

"A" & "B"–Based on Manufacturer Recommendation.

SCOPE DEMARCATION

BHEL | BIDDER

CUSTOMER: TAMIL NADU GENERATION AND DISTRIBUTION CORPORATION (TANGEDCO)

PROJECT: 2 X 660 MW TANGEDCO UDANGUDI STPP, STAGE–1

BHARAT HEAVY ELECTRICALS LTD. HYDERABAD

	NAME	SIGN.	DATE	NO.OF VAR.
DRN.	MURALIDHAR	–SD–	19.01.19	N.A.
CHD.	GIRISH PALO	–SD–	19.01.19	
APPD.	MSPB	–SD–	19.01.19	

DEPT.	UNTOL. DIMS. GR.	SCALE	WEIGHT (KG)	REF. TO ASSY. DRG.	ITEM NO.	NO.OF ITEMS
PE&SD CODE 450	g/M/f	N.T.S	N.A.	N.A.	N.A.	N.A.

TITLE: ANNEX–1A: P&ID HYDRANT, SPRAY JOCKEY & BOOSTER PUMPS

CARD CODE: NA

DRG. NO: PESD/UDG/001–1

CUST. DRG. NO. ——————

REV. 00

SHT. No 01 NO. OF SHT. 01

REV.	DATE	ALTERED	CHD/APPD	ZONE

COMPUTER FILE NAME: 3810103930–S01–R01.DWG

REF. DRG. NO. 1391000136

SIGN. AND DATE

INVENTORY NO

THE INFORMATION ON THIS DOCUMENT IS THE PROPERTY OF BHARAT HEAVY ELECTRICALS LIMITED. IT MUST NOT BE USED DIRECTLY OR INDIRECTLY IN ANY WAY DETRIMENTAL TO THE INTEREST OF THE COMPANY

ANNEXURE-2A : DATA SHEET FOR HYDRANT-SPRAY WATER PUMP - ~~MOTOR~~ - DIESEL ENGINE

Sl.no.	Description	BHEL Requirement	DETAILS
GENERAL DATA			
1	Service	**Hydrant Pump :** For supplying water to Hydrant header from the fire water storage sump **Spray water Pump :** For supplying the water to the spray water system from the Fire water storage sump.	
2	Number of Pumps	Total : 10 Nos. 5 Nos. for Hydrant Pump[3W+2S][~~3 No. Motor~~ + 2 No. Diesel Engine driven] 2 Nos. for Spray Pump[1W+1S] [~~1 No. Motor~~ + 1 No. Diesel Engine driven]	
3	Location	Indoor	
4	Duty	Intermittent. However pump shall be suitable for continuous operation.	
5	Drives	Motor & Diesel Engine.(Supply of HT Motor is excluded from bidder's scope).	
6	Pumping fluid	Water	
7	Fluid temp Deg C	Ambient	
PUMP PERFORMANCE & OTHER DETAILS			
8	Pump Type	Horizontal,Centrifugal type, Side Suction and Side discharge.	
9	Design Standard of pump	HIS/IS 5120/ Equivalent standard The pumps shall comply with the regulations of Tariff Advisory Committee (TAC).	
10	Rated Flow (m^3/hr)	410	
11	Rated Differential Head (mlc)	120	
12	Inline with TAC requirement,Pumps shall be capable of furnishing not less than 150 % of rated capacity at a head of not less than 65 % of the rated head.		
13	Temperature of pumping fluid	Ambient	
14	Pump Model No.	Pump model shall be same for both Motor & Engine driven pump. Bidder to indicate pump model	
15	No. of Stages of pump	Bidder To Furnish	
16	Parallel operation	Yes. Load sharing between Pumps:Not exceeding 5% over entire operating range when operating in parallel with other pumps	
17	Rated Speed of Pump (rpm)	1500	
18	Rated speed of Motor (rpm)	1500	
19	Rated speed of Engine (rpm)	1500	
20	Pump Efficiency in %	Bidder To Furnish	
21	Available Pressure at centre line of Suction nozzle of Pump mlc	Min. 1.0 kg/cm2	
22	NPSH(A) at pump suction nozzle (mlc)	10.0 m	
23	NPSH(R) (mlc)	Bidder to furnish.	
24	NPSH(A) - NPSH(R)	1 m at rated condition & NPSHR shall be less than NPSHA till end of the curve condition.	
25	Pump shut off head.	Flow vs Head curve shall be continuously rising towards shut-off head.	
26	Pump shut off head/rated head.	Shall not be exceed 120% of rated head inclusive of all tolerance,as per TAC.	
27	BEP of the offered pump, m3/Hr	Bidder To Furnish	
28	Thermal minimum flow , m3/Hr	Bidder To Furnish	
29	Stable minimum flow, m3/Hr	Bidder To Furnish	
30	Pump End of the curve flow, m3/hr	Bidder To Furnish	
31	Impeller type	Closed	
32	Pump rated impeller dia, mm	Bidder To Furnish	
33	Pump max. impeller dia, mm	Bidder To Furnish	
34	Pump minimum impeller dia., mm	Bidder To Furnish	
PUMP CONSTRUCTION FEATURES			
35	Material of Construction: Casing : SS304 Casing liner: SS316 Diffuser: SS316 Impeller : SS316 Wearing rings: SS316 Pump shaft: SS316 Shaft sleeve: SS316 Shaft bearings : By bidder Base plate : Carbon steel as per IS-2062 with epoxy painting Wetted fasteners: SS-316 Companion Flange : CS All hardware underground: SS316		

Sl.no	Description	BHEL Requirement	DETAILS
36	Sealing arrangement	Cartridge type Mechanical seal as per Manufacturer's Standard	
37	Flushing Plan	Bidder To Furnish	
38	Cooling Plan	Bidder To Furnish	
39	Vendor shall clearly indicate the type of cooling system adopted. In case water is used as a cooling media [for pump/~~motor~~/engine] by tapping of the water from the pump discharge (before the pump discharge valve), the capacity of the pump shall be increased, so that the net capacity meets the specification requirement.. All piping, valves, strainer, instruments etc. required for this purpose shall be provided by the vendor.		
40	Type of axial thrust balancing arrangement	Bidder To Furnish	
41	Type of main bearings for pump	Bidder To Furnish	
42	Main bearings lubrication	Bidder To Furnish	
43	Type of thrust bearings for pump	Bidder To Furnish	
44	Thrust bearing lubrication	Bidder To Furnish	
45	Direction of rotation of Pump	Bidder To Furnish	
46	Direction of rotation of Motor	Bidder To Furnish	
47	Direction of rotation of Engine	Bidder To Furnish	
COUPLING			
48	Coupling standard	Manufacturer Standard	
49	Type of coupling	Metallic, non-lubricated, flexible element type (i.e. either diaphragm or disc type) with spacer [The spacer nominal length shall be at least 125 mm and shall permit removal of the coupling, bearings, seal and rotor, as applicable, without disturbing the driver or the suction and discharge piping.]	
50	Non sparking type couplign guard	Yes	
51	Service factor for the coupling	1.5	
PERFORMANCE TEST STANDARD FOR PUMPS			
52	Performance test standard	The testing Standards of the Pumps shall conform to the standards as indicated in TAC recommendation. Performance tolerance shall be as mentioned below: a) Rated head at rated flow: Zero negative tolerance b) Shut-off head: Zero negative tolerance. 5% Positive tolerance permitted. c) Rated BKW: Positive tolerance permitted till selected motor rating meets end of the curve condition d) Efficiency at rated capacity: No negative tolerance	
53	Maximum Allowed Working Pressure (MAWP) in Kg/cm2 g	Bidder To Indicate	
54	Hydraulic test pressure of casing Kg/cm²(g)	Hydraulic test pressure of casing shall be 1.5 times the MAWP.Test duration shall be minimum 30 min.	
	**Bidder to confirm that the casing material mentioned in sl no 35 shall cater to the Hydraulic test pressure of casing Kg/cm²(g) as mentioned in sl no 54..If Not, bidder to consider superior material of casing.		
55	Noise level for Pump	85 DBA at 1 m distance, in any direction	
56	Vibration for Pump	As ISO 10816	
57	Pump Instruments	Pressure Gauge at suction and Discharge	
PUMP TERMINAL POINT DETAILS			
58	Pump Suction nozzle - Size - Rating - Standard - Facing - Location	Bidder To Indicate	
59	Pump Discharge nozzle - Size - Rating - Standard - Facing - Location	Bidder To Indicate	
60	Pump Cooling water inlet/outlet sizes - Size - Rating - Standard - Facing - Location	Bidder To Indicate	
61	Vent/Drain connection: 1.Vent with 3 way SS isolating valve 2.Drain connection with valve	Bidder To Indicate	
~~**MOTOR DETAILS FOR MOTOR DRIVEN PUMPS[For More Details Please refer Attached Motor Specification(Annexure-3)**~~			
~~62~~	~~Drive/Installation~~	~~Motor/Horizontal~~	
~~63~~	~~BKW at the rated point~~		
~~64~~	~~BKW at end of curve~~		

Sl.no.	Description	BHEL Requirement	DETAILS
~~65~~	~~Slected drive rating in kW:~~ ~~The motor rating [At 50 Deg.C ambient] shall be arrived at considering 15% margin over the duty point input or 10% over the maximum demand of the driven equipment, whichever is higher, considering highest system frequency.~~	~~Bidder to mention motor kW rating for the motor duly taking care of the requirements.~~	
~~66~~	~~Design Standard of Motor~~	~~IS 325~~	
~~67~~	~~Manufacturer~~	~~BHEL Bhopal Only.~~	
~~68~~	~~Ambient Temperature~~	~~50 Deg C~~ ~~All motors shall be designed to operate in humid atmosphere with a maximum ambient temperature of 50 Deg C.~~	
~~69~~	~~Area classification for motor~~	~~Safe Area~~	
~~70~~	~~Rated Voltage & Frequency~~	~~3.3 kV & 50 Hz~~	
~~71~~	~~Permissible variations in Voltage/Frequency/Combined~~	~~(+/-)/10%/(+/-)/5%/(+/-)/10%~~	
~~72~~	~~No of poles / synchronous speed~~	~~4/1500 rpm~~	
~~73~~	~~Energy efficient class~~		
~~74~~	~~Starting Current as % of FLC~~	~~450% of FLC inclusive of all tolerances.~~	
~~75~~	~~Method of Starting~~	~~Motor shall be capable of starting with DOL~~	
~~76~~	~~Method of cooling~~	~~IC 411(TEFC) /IC 511(TETV) /IC 611(CACA) / (CACW)~~	
~~77~~	~~Class of Insulation & Temp. rise~~	~~Class F with Temperature rise ltd. to class B~~	
~~78~~	~~Space Heater~~	~~Required for all motors 30 kw and above~~	
~~79~~	~~Degree of protection/Canopy Required~~	~~IP 55/Yes~~	
~~80~~	~~TB Short time Current & Short time Time~~	~~40 kA , 0.25 Sec~~	
~~81~~	~~TB To be provided on the right hand side as viewed from the drive end.~~		
~~82~~	~~Cable, Cable glands & Lugs~~	~~Cable details shall be furnished during During Detail Engg.~~ ~~Accordingly suitable double compression Nickel plated brass cable glands and Tinned copper lugs to be provided by the bidder.~~	
~~83~~	~~No. of Starts~~	~~Motors shall be capable of three equally spread starts per hour under normal condition or two starts in quick succession from cold~~	
~~84~~	~~Bearing RTDs, Winding RTDs & TGs~~	~~a) RTD's for winding temperature detection -4 Nos. of simplex type or 2 Nos. of Duplex platinum resistance type for each phase stator winding.~~ ~~b) RTD's for Bearing Temperature Detection - 1 Nos. of Duplex platinum resistance type for Each Bearing.~~ ~~c) 1 No. Dial Type Thermometer with adjustable alarm contact for each bearing.~~	
~~85~~	~~Noise~~	~~85 DBA at 1 m distance, in any direction~~	
~~86~~	~~Vibration~~	~~As per IS12075/IEC 60034-14~~	
DIESEL ENGINE DETAILS FOR ENGINE DRIVEN PUMPS			
87	Drive	Diesel Engine	
88	Type	The engine shall be naturally aspirated, super charged or turbo-charged as recommended by the manufacturer. (Ref. Fire Protection Manual by TAC).	
89	Location	Indoor	
90	BKW at the rated point	As per TAC / Factory Mutual	
91	BKW at end of curve		

Sl.no.	Description	BHEL Requirement	DETAILS
92	Slected drive rating: The continuous engine brake horse power rating (after accounting for all auxiliary power consumption) at the site conditions shall be at least 20% greater than the brake horse power required to drive the pump at it's duty point at rated R.P.M. and in no case less than the brake horse power required to drive the pump at 150% of rated discharge or at any condition of operation of pump. Deaerating Factors considered by the manufacturer to arrive at the shaft power of the diesel engine at site, shall not be less than the following for normally aspirated engines only : a) 3% for each 305 meter elevation above MSL b) 1% for each 5.6 deg C rise in air temperature above 15.6 deg C The base power rating of the diesel engine shall be referred to any accepted datum like BS/SAE Standard condition or equivalent. In any case, horsepower rating shall not be higher than the limit set by Tariff Advisory Committee.	Bidder to mention engine HP rating for the engine duly taking care of the requirements.	
93	Drive Standard	IS -10000, BS- 5514 and as per standard practice of diesel engine manufacturer's association of USA. Selection, Design and construction of the diesel engine shall be guided by the TAC recommendations.	
94	Name of Manufacturer	Bidder to furnish.	
95	Model No	Bidder to furnish.	
96	Duty	Intermittent. However, same shall be capable of operating continuously on full load at the site elevation for a period of six hours.	
97	Speed	shall be 1500 rpm suitable for pump speed.	
98	Type of cooling	Bidder to Furnish	
99	Noise	105 DBA at 1 m distance, in any direction	
100	Vibration	As per IS standard	

ANNEXURE-2B : DATA SHEET FOR JOCKEY PUMP - MOTOR

Sl.no.	Description	BHEL Requirement	DETAILS
GENERAL DATA			
1	Service	Jockey Pump[For Replenishing the level of water in the Hydro Pneumatic tank by supplying water from Fire	
2	Number of Pumps	Total : 2 Nos. 2 Nos. for Jockey Pump[1W+1S] [All Motor Driven]	
3	Location	Indoor	
4	Duty	Intermittent. However pump shall be suitable for continuous operation.	
5	Drives	Motor	
6	Pumping fluid	Water	
7	Fluid temp Deg C	Ambient	
PUMP PERFORMANCE & OTHER DETAILS			
8	Pump Type	Horizontal,Centrifugal type, End Suction and Back Pullout.	
9	Design Standard of pump	HIS/IS 5120/ Equivalent standard The pumps shall comply with the regulations of Tariff	
10	Rated Flow (m^3/hr)	40	
11	Rated Differential Head (mlc)	120	
12	Inline with TAC requirement,Pumps shall be capable of furnishing not less than 150 % of rated capacity at a head of not less than 65 % of the rated head.		
13	Temperature of pumping fluid	Ambient	
14	Pump Model No.	Pump model shall be same for both the Pumps	
15	No. of Stages of pump	Bidder To Furnish	
16	Parallel operation	Yes. Load sharing between Pumps:Not exceeding 5% over	
17	Rated Speed of Pump (rpm)	3000	
18	Rated speed of Motor (rpm)	3000	
20	Pump Efficiency in %	Bidder To Furnish	
21	Available Pressure at centre line of Suction nozzle of Pump mlc	Min. 1.0 kg/cm2	
22	NPSH(A) at pump suction nozzle (mlc)	10.0 m	
23	NPSH(R) (mlc)	Bidder to furnish.	
24	NPSH(A) - NPSH(R)	Minimum 1 m of margin between NPSH(A) & NPSH(R) to be maintained.	
25	Pump shut off head.	Flow vs Head curve shall be continuously rising towards shut-off head.	
26	Pump shut off head/rated head.	Shall not be exceed 120% of rated head inclusive of all tolerance,as per TAC.	
27	BEP of the offered pump, m3/Hr	Bidder To Furnish	
28	Thermal minimum flow , m3/Hr	Bidder To Furnish	
29	Stable minimum flow, m3/Hr	Bidder To Furnish	
30	Pump End of the curve flow, m3/hr	Bidder To Furnish	
31	Impeller type	Closed	
32	Pump rated impeller dia, mm	Bidder To Furnish	

Sl.no.	Description	BHEL Requirement	DETAILS
33	Pump max. impeller dia, mm	Bidder To Furnish	
34	Pump minimum impeller dia., mm	Bidder To Furnish	
PUMP CONSTRUCTION FEATURES			
35	Material of Construction: Casing : SS304		
36	Sealing arrangement	Cartridge type Mechanical seal as per Manufacturer's Standard	
37	Flushing Plan	Bidder To Furnish	
38	Cooling Plan	Bidder To Furnish	
39	Vendor shall clearly indicate the type of cooling system adopted. In case water is used as a cooling media [for pump/motor] by tapping of the water from the pump discharge (before the pump discharge valve), the capacity of the pump shall be increased, so that the net capacity meets the specification requirement.. All piping, valves, strainer, instruments etc. required for this purpose shall be provided by the vendor.		
40	Type of axial thrust balancing arrangement	Bidder To Furnish	
41	Type of main bearings for pump	Bidder To Furnish	
42	Main bearings lubrication	Bidder To Furnish	
43	Type of thrust bearings for pump	Bidder To Furnish	
44	Thrust bearing lubrication	Bidder To Furnish	
45	Direction of rotation of Pump	Bidder To Furnish	
46	Direction of rotation of Motor	Bidder To Furnish	
COUPLING			
48	Coupling standard	Manufacturer Standard	
49	Type of coupling	Metallic, non-lubricated, flexible element type (i.e. either diaphragm or disc type) with spacer [The spacer	
50	Non sparking type couplign guard	Yes	
51	Service factor for the coupling	1.5	
PERFORMANCE TEST STANDARD FOR PUMPS			
52	Performance test standard	The testing Standards of the Pumps shall conform to the standards as indicated in TAC recommendation.	
53	Maximum Allowed Working Pressure (MAWP) in Kg/cm2 g	Bidder To Indicate	
54	Hydraulic test pressure of casing Kg/cm²(g)	Hydraulic test pressure of casing shall be 1.5 times the MAWP.Test duration shall be minimum 30 min.	
	**Bidder to confirm that the casing material mentioned in sl no 35 shall cater to the Hydraulic test pressure of casing Kg/cm²(g) as mentioned in sl no 54..If Not, bidder to consider superior material of		
55	Noise level for Pump	85 DBA at 1 m distance, in any direction	
56	Vibration for Pump	As ISO 10816	
57	Pump Instruments	Pressure Gauge at suction and Discharge	
PUMP TERMINAL POINT DETAILS			
57	Pump Suction nozzle - Size	Bidder To Indicate	
58	Pump Discharge nozzle - Size	Bidder To Indicate	
59	Pump Cooling water inlet/outlet sizes - Size	Bidder To Indicate	
60	Vent/Drain connection: 1.Vent with 3 way SS isolating valve	Bidder To Indicate	

Sl.no.	Description	BHEL Requirement	DETAILS
MOTOR DETAILS FOR MOTOR DRIVEN PUMPS[For More Details Please refer Attached Motor Specification(Annexure-3)			
61	Drive/Installation	Motor/Horizontal	
62	BKW at the rated point		
63	BKW at end of curve		
64	Slected drive rating in kW: The motor rating [At 50 Deg.C ambient] shall	Bidder to mention motor kW rating for the motor duly taking care of the requirements.	
65	Design Standard of Motor	IS 325	
66	Manufacturer	As per Approved Sub Vendor List	
67	Ambient Temperature	50 Deg C All motors shall be designed to operate in humid	
68	Area classification for motor	Safe Area	
69	Rated Voltage & Frequency	415 V & 50 Hz	
70	Permissible variations in Voltage/Frequency/Combined	(+/-)/10%/(+/-)/5%/(+/-)/10%	
71	No of poles / synchronous speed	2/3000 rpm	
72	Energy efficient class		
73	Energy efficient class	IE-3 Type with starting current as per IS12615.	
74	Starting Current as % of FLC	600% of FLC inclusive of all tolerances.	
75	Method of cooling	IC 411(TEFC) /IC 511(TETV) /IC 611(CACA)	
76	Class of Insulation & Temp. rise	Class F with Temperature rise ltd. to class B	
77	Space Heater	Required for all motors 30 kw and above	
78	Degree of protection/Canopy to be provided	IP 55/Yes	
79	TB Short time-Current & Short time-Time	50 kA , 0.25 Sec	
80	TB To be provided on the right hand side as viewed from the drive end.		
81	Cable, Cable glands & Lugs	Cable details shall be furnished during DDE. Accordingly suitable double compression Nickel plated	
82	No. of Starts	Motors shall be capable of three equally spread starts per hour under normal condition or two starts in quick	
83	Bearing RTDs, Winding RTDs & TGs	Not Applicable.	
84	Noise	85 DBA at 1 m distance, in any direction	
85	Vibration	As per IS12075/IEC 60034-14	

ANNEXURE-2C : DATA SHEET FOR BOOSTER WATER PUMP - MOTOR - DIESEL ENGINE

Sl.no	Description	BHEL Requirement	DETAILS
GENERAL DATA			
1	Service	**Booster water Pump** : For boosting the pressure of hydrant water system.	
2	Number of Pumps	Total : 2 Nos. 2 Nos. for Booster Pump[1W+1S] [1 No. Motor + 1 No. Diesel Engine driven]	
3	Location	Indoor	
4	Duty	Intermittent. However pump shall be suitable for continuous operation.	
5	Drives	Motor & Diesel Engine	
6	Pumping fluid	Water	
7	Fluid temp Deg C	Ambient	
PUMP PERFORMANCE & OTHER DETAILS			
8	Pump Type	Horizontal,Centrifugal type, Side Suction and Side Discharge.	
9	Design Standard of pump	HIS/IS 5120/ Equivalent standard The pumps shall comply with the regulations of Tariff Advisory Committee (TAC).	
10	Rated Flow (m^3/hr)	171	
11	Rated Differential Head (mlc)	45	
12	Inline with TAC requirement,Pumps shall be capable of furnishing not less than 150 % of rated capacity at a head		
13	Temperature of pumping fluid	Ambient	
14	Pump Model No.	Pump model shall be same for both Motor & Engine driven pump	
15	No. of Stages of pump	Single Stage	
16	Parallel operation	Yes. Load sharing between Pumps:Not exceeding 5% over entire operating range when operating in parallel with other pumps	
17	Rated Speed of Pump (rpm)	1500	
18	Rated speed of Motor (rpm)	1500	
19	Rated speed of Engine (rpm)	1500	
20	Pump Efficiency in %	Bidder To Furnish	
21	Available Pressure at centre line of Suction nozzle of Pump mlc	15.8 kg/cm2 a [max]	
22	NPSH(A) at pump suction nozzle (mlc)	80 m to 120.0 m	
23	NPSH(R) (mlc)	Bidder to furnish.	
24	NPSH(A) - NPSH(R)	Minimum 1 m of margin between NPSH(A) & NPSH(R) to be maintained.	
25	Pump shut off head.	Flow vs Head curve shall be continuously rising towards shut-off head.	
26	Pump shut off head/rated head.	Shall not be exceed 120% of rated head inclusive of all tolerance,as per TAC.	
27	BEP of the offered pump, m3/Hr	Bidder To Furnish	
28	Thermal minimum flow , m3/Hr	Bidder To Furnish	
29	Stable minimum flow, m3/Hr	Bidder To Furnish	
30	Pump End of the curve flow, m3/hr	Bidder To Furnish	
31	Impeller type	Closed	
32	Pump rated impeller dia, mm	Bidder To Furnish	
33	Pump max. impeller dia, mm	Bidder To Furnish	
34	Pump minimum impeller dia., mm	Bidder To Furnish	
PUMP CONSTRUCTION FEATURES			
35	Material of Construction: Casing : SS316 Casing liner: SS316 Diffuser: SS316 Impeller : SS316 Wearing rings: SS316 Pump shaft: SS316 Shaft sleeve: SS316 Shaft bearings : By bidder Base plate : Carbon steel as per IS-2062 with epoxy painting Wetted fasteners: SS-316 Companion Flange : CS All hardware underground: SS316		
36	Sealing arrangement	Cartridge type Mechanical seal as per Manufacturer's Standard	
37	Flushing Plan	Bidder To Furnish	
38	Cooling Plan	Bidder To Furnish	
39	Vendor shall clearly indicate the type of cooling system adopted. In case water is used as a cooling media [for		
40	Type of axial thrust balancing arrangement	Bidder To Furnish	
41	Type of main bearings for pump	Bidder To Furnish	
42	Main bearings lubrication	Bidder To Furnish	
43	Type of thrust bearings for pump	Bidder To Furnish	
44	Thrust bearing lubrication	Bidder To Furnish	
45	Direction of rotation of Pump	Bidder To Furnish	
46	Direction of rotation of Motor	Bidder To Furnish	
47	Direction of rotation of Engine	Bidder To Furnish	
COUPLING			

Sl.no	Description	BHEL Requirement	DETAILS
48	Coupling standard	Manufacturer Standard	
49	Type of coupling	Metallic, non-lubricated, flexible element type (i.e. either diaphragm or disc type) with spacer [The spacer nominal length shall be at least 125 mm and shall permit removal of the coupling, bearings, seal and rotor, as applicable, without disturbing the driver or the suction and discharge piping.]	
50	Non sparking type couplign guard	Yes	
51	Service factor for the coupling	1.5	
PERFORMANCE TEST STANDARD FOR PUMPS			
52	Performance test standard	The testing Standards of the Pumps shall conform to the standards as indicated in TAC recommendation. Performance tolerance shall be as mentioned below: a) Rated head at rated flow: Zero negative tolerance b) Shut-off head: Zero negative tolerance. 5% Positive tolerance permitted. c) Rated BKW: Positive tolerance permitted till selected motor rating meets end of the curve condition d) Efficiency at rated capacity: No negative tolerance	
53	Maximum Allowed Working Pressure (MAWP) in Kg/cm2 g	Bidder To Indicate	
54	Hydraulic test pressure of casing Kg/cm²(g)	Hydraulic test pressure of casing shall be 1.5 times the MAWP.Test duration shall be minimum 30 min.	
	**Bidder to confirm that the casing material mentioned in sl no 35 shall cater to the Hydraulic test pressure of		
55	Noise level for Pump	85 DBA at 1 m distance, in any direction	
56	Vibration for Pump	As ISO 10816	
57	Pump Instruments	Pressure Gauge at suction and Discharge	
PUMP TERMINAL POINT DETAILS			
58	Pump Suction nozzle - Size - Rating - Standard - Facing - Location	Bidder To Indicate	
59	Pump Discharge nozzle - Size - Rating - Standard - Facing - Location	Bidder To Indicate	
60	Pump Cooling water inlet/outlet sizes - Size - Rating - Standard - Facing - Location	Bidder To Indicate	
61	Vent/Drain connection: 1.Vent with 3 way SS isolating valve 2.Drain connection with valve	Bidder To Indicate	
MOTOR DETAILS FOR MOTOR DRIVEN PUMPS[For More Details Please refer Attached Motor Specification(Annexure-3)			
62	Drive/Installation	Motor/Horizontal	
63	BKW at the rated point		
64	BKW at end of curve		
65	Slected drive rating in kW: The motor rating [At 50 Deg.C ambient] shall be arrived at considering 15% margin over the duty point input or 10% over the maximum demand of the driven equipment, whichever is higher, considering highest system frequency.	Bidder to mention motor kW rating for the motor duly taking care of the requirements.	
66	Design Standard of Motor	IS 325	
67	Manufacturer	As per Approved Sub Vendor List	
68	Ambient Temperature	50 Deg C All motors shall be designed to operate in humid atmosphere with a maximum ambient temperature of 50 Deg C.	
69	Area classification for motor	Safe Area	
70	Rated Voltage & Frequency	415 V & 50 Hz	
71	Permissible variations in Voltage/Frequency/Combined	(+/-)/10%/(+/-)/5%/(+/-)/10%	
72	No of poles / synchronous speed	4/1500 rpm	
73	Energy efficient class		
74	Starting Current as % of FLC	600% of FLC inclusive of all tolerances.	
75	Method of Starting	Motor shall be capable of starting with DOL	
76	Method of cooling	IC 411(TEFC) /IC 511(TETV) /IC 611(CACA) / (CACW)	
77	Class of Insulation & Temp. rise	Class F with Temperature rise ltd. to class B	
78	Space Heater	Required for all motors 30 kw and above	
79	Degree of protection/Canopy Required	IP 55/Yes	
80	TB Short time-Current & Short time-Time	50 kA , 0.25 Sec	
81	TB To be provided on the right hand side as viewed from the drive end.		

Sl.no	Description	BHEL Requirement	DETAILS
82	Cable, Cable glands & Lugs	Cable details shall be furnished during During Detail Engg. Accordingly suitable double compression Nickel plated brass cable glands and Tinned copper lugs to be provided by the bidder.	
83	No. of Starts	Motors shall be capable of three equally spread starts per hour under normal condition or two starts in quick succession from cold[Refer Cl. No. 05.02.03 of Motor Specification(Annexure-3).	
84	Bearing RTDs, Winding RTDs & TGs	Not Applicable.	
85	Noise	85 DBA at 1 m distance, in any direction	
86	Vibration	As per IS12075/IEC 60034-14	
DIESEL ENGINE DETAILS FOR ENGINE DRIVEN PUMPS			
87	Drive	Diesel Engine(Internal Combustion)	
88	Type	Compression i g n i t i o n , m e c h a n i c a l (airless) direct injection, multicylinder and four stroke cycle and cold starting type.	
89	Location	Indoor	
90	BKW at the rated point	As per TAC / Factory Mutual	
91	BKW at end of curve		
92	Slected drive rating: The continuous engine brake horse power rating (after accounting for all auxiliary power consumption) at the site conditions shall be at least 20% greater than the brake horse power required to drive the pump at it's duty point at rated R.P.M. and in no case less than the brake horse power required to drive the pump at 150% of rated discharge or at any condition of operation of pump. Deaerating Factors considered by the manufacturer to arrive at the shaft power of the diesel engine at site, shall not be less than the following for normally aspirated engines only : a) 3% for each 305 meter elevation above MSL b) 1% for each 5.6 deg C rise in air temperature above 15.6 deg C The base power rating of the diesel engine shall be referred to any accepted datum like BS/SAE Standard condition or equivalent. In any case, horsepower rating shall not be higher than the limit set by Tariff Advisory Committee.	Bidder to mention engine HP rating for the motor duly taking care of the requirements.	
93	Drive Standard	IS -10000, BS- 5514 and as per standard practice of diesel engine manufacturer's association of USA. Selection, Design and construction of the diesel engine shall be guided by the TAC recommendations.	
94	Name of Manufacturer	Bidder to furnish.	
95	Model No	Bidder to furnish.	
96	Duty	Intermittent. However, same shall be capable of operating continuously on full load at the site elevation for a period of six hours.	
97	Speed	shall be 1500 rpm suitable for pump speed.	
98	Type of cooling	Bidder to Furnish	
99	Noise	105 DBA at 1 m distance, in any direction	
100	Vibration	As per IS standard	

PROJECT: 2 X 660 MW TANGEDCO UDANGUDI STPP, STAGE-1
CUSTOMER: TAMIL NADU GENERATION AND DISTRIBUTION CORPORATION (TANGEDCO)
CONSULTANT: FICHTNER CONSULTING ENGINEERS (INDIA) PRIVATE LIMITED CHENNAI, INDIA

DATA SHEET FOR SEA WATER INTAKE PUMP - DIESEL ENGINE DRIVEN

Sl.no	Description	BHEL Requirement	DETAILS
	GENERAL DATA		
1	Service	**Sea Water Intake Pump** : for supplying fire water to the coal stockpile area ring main header for fighting large coal stockpile fire from the sea water storage system/reservior.	
2	Number of Pumps	Total : 1 No. 1 No. for Engine Driven Sea Water Intake Pump.	
3	Location	Outdoor, Raw Water Intake Pump House	
4	Duty	Intermittent. However pump shall be suitable for continuous operation.	
5	Drives	Diesel Engine	
6	Pumping fluid	Water	
7	Fluid temp Deg C	Ambient	
10	Elevation of Pump House FFL	EL (+) 0.0 M	
11	Elevation of sump invert level	EL (-) 6.0 M	
12	Sump depth (Top of intake structure to sump invert level)	5.5 M	
	PUMP PERFORMANCE & OTHER DETAILS		
8	Pump Type	Vertical Turbine,Centrifugal type	
9	Design Standard of pump	HIS/IS 5120/ Equivalent standard The pumps shall comply with the regulations of Tariff Advisory Committee (TAC).	
10	Rated Flow (m^3/hr)	410	
11	Rated Differential Head (mlc) at discharge nozzle	105	
12	Inline with TAC requirement,Pumps shall be capable of furnishing not less than 150 % of rated capacity at a head of not less than 65 % of the rated head. Bidder to confirm.		
13	Temperature of pumping fluid	Ambient	
14	Pump Model No.	Bidder To Furnish. Pump model shall be same for both Motor & Engine driven pump	
15	No. of Stages of pump	Bidder To Furnish	
16	Parallel operation	NA	
17	Rated Speed of Pump (rpm)	1500	
18	Rated speed of Motor (rpm)	NA	
19	Rated speed of Engine (rpm)	1500	
20	Pump Efficiency in %	Bidder To Furnish	
21	Minimum Available Pressure at Suction of Pump mlc	11.5 mwc	
22	NPSH(A) at pump suction nozzle (mlc)	11 mwc	
23	NPSH(R) (mlc)	Bidder to furnish.	
24	NPSH(A) - NPSH(R)	Minimum 1 m of margin between NPSH(A) & NPSH(R) to be maintained.	
25	Pump shut off head.	Flow vs Head curve shall be continuously rising towards shut-off head.	
26	Pump shut off head/rated head.	Shall be continuously rising towards shut-off head. Shall not be exceed 140% of rated head inclusive of all tolerance,as per TAC.	
27	BEP of the offered pump, m3/Hr	Bidder To Furnish	
28	Thermal minimum flow , m3/Hr	Bidder To Furnish	
29	Stable minimum flow, m3/Hr	Bidder To Furnish	
30	Pump End of the curve flow, m3/hr	Bidder To Furnish	
31	Impller type	Bidder To Furnish	
32	Pump rated impeller dia, mm	Bidder To Furnish	
33	Pump max. impeller dia, mm	Bidder To Furnish	
34	Pump minimum impeller dia., mm	Bidder To Furnish	
PUMP CONSTRUCTION FEATURES			
35	Material of Construction: BOWL : Duplex SS 2205 to UNS 31803 Impeller : Duplex SS 2205 to UNS 31803 Pump shaft: Duplex SS ASTM A 890 CD 4M CU Shaft sleeve: Duplex SS 2205 to UNS 31803 Column Pipe: Duplex SS 2205 to UNS 31803 Discharge head and Tee: Duplex SS 2205 to UNS 31803 Motor stool: Carbon steel (IS:2062) Shaft bearings : By bidder Base plate : Carbon steel as per IS-2062 with epoxy painting Fasteners in pump assembly: SS 316L for fasteners submerged in water and alloy steel for other fasteners **Duplex SS shall have PREN > 38 Companion Flange : MS All hardware underground: SS316 ****Bidder to confirm that the casing material mentioned above shall cater to the max. discharge pressure(i.e Pressure at shut off condition) including all tolerance.If Not, bidder to consider superior material of casing.**		

Sl.no	Description	BHEL Requirement	DETAILS
36	Sealing arrangement	Cartridge type Mechanical seal as per Manufacturer's Standard	
37	Flushing Plan		
38	Cooling Plan		
39	Vendor shall clearly indicate the type of cooling system adopted. In case water is used as a cooling media [for pump/motor/engine] by tapping of the water from the pump discharge (before the pump discharge valve), the capacity of the pump shall be increased, so that the net capacity meets the specification requirement.. All piping, valves, strainer, instruments etc. required for this purpose shall be provided by the vendor.		
40	Type of axial thrust balancing arrangement		
41	Type of main bearings for pump		
42	Main bearings lubrication		
43	Type of thrust bearings for pump		
44	Thrust bearing lubrication		
45	Direction of rotation of Pump		
46	Direction of rotation of Motor		
47	Direction of rotation of Engine		
COUPLING BETWEEN PUMP & MOTOR			
48	Coupling standard	Manufacturer Standard	
49	Type of coupling	Metallic, non-lubricated, flexible element type (i.e. either diaphragm or disc type) with spacer [The spacer nominal length shall be at least 125 mm and shall permit removal of the coupling, bearings, seal and rotor, as applicable, without disturbing the driver or the suction and discharge piping.]	
50	Non sparking type couplign guard	Yes	
51	Service factor for the coupling	1.5	
COUPLING BETWEEN PUMP & GEARBOX			
52	Bidder to furnish details		
COUPLING BETWEEN GEARBOX & ENGINE			
53	Bidder to furnish details		
PERFORMANCE TEST STANDARD FOR PUMPS			
54	Performance test standard	The testing Standards of the Pumps shall be as per clause no 8.3.0 of PY-AS-4-M078-8682-01. Performance tolerance shall be as mentioned below: a) Rated head at rated flow: Zero negative tolerance b) Shut-off head: Zero negative tolerance. 5% Positive tolerance permitted. c) Rated BKW: Positive tolerance permitted till selected motor rating meets end of the curve condition	
55	Maximum Allowed Working Pressure (MAWP) in Kg/cm2 g	Bidder to furnish.	
56	Hydraulic test pressure of casing Kg/cm^2(g)	Hydraulic test pressure of casing shall be 1.5 times the MAWP.Test duration shall be minimum 1 hour	
57	Noise level for Pump	85 DBA at 1 m distance, in any direction	
58	Vibration for Pump	As ISO 10816	
PUMP TERMINAL POINT DETAILS			
59	Pump Suction nozzle - Size - Rating - Standard - Facing - Location		
60	Pump Discharge nozzle - Size - Rating - Standard - Facing - Location		
61	Pump Cooling water inlet/outlet sizes - Size - Rating - Standard - Facing - Location		
62	Vent/Drain connection: 1.Vent with 3 way SS isolating valve 2.Drain connection with valve		

Sl.no	Description	BHEL Requirement	DETAILS
	~~MOTOR DETAILS FOR MOTOR DRIVEN PUMPS [For Details please refer annexure-6 & TAC guide lines]~~		
~~63~~	~~Drive~~	~~Motor~~	
~~64~~	~~BKW at the rated point~~		
~~65~~	~~BKW at end of curve~~		
~~66~~	~~Slected drive rating in kW:~~ ~~Motor name-plate rating at 50 Deg C shall have at least 10% margin respectively over the input power requirement of the driven equipment at rated duty point.~~	~~Bidder to mention motor kW rating for the motor duly taking care of the requirements.~~	
~~67~~	~~Design Standard of Motor~~	~~IS 325~~	
~~68~~	~~Manufacturer~~	~~BHEL Bhopal Only.~~	
~~69~~	~~Ambient Temperature~~	~~50 Deg C~~ ~~All motors shall be designed to operate in humid atmosphere with a maximum ambient temperature of 50 Deg C.~~	
~~70~~	~~Area classification for motor~~	~~Safe Area~~	
~~71~~	~~Rated Voltage & Frequency~~	~~6.6kV & 50 Hz~~	
~~72~~	~~Permissible variations in Voltage/Frequency/Combined~~	~~(+/-)/10%/(+/-)/5%/(+/-)/10%~~	
~~73~~	~~No of poles / synchronous speed~~	~~4/1500 rpm~~	
~~74~~	~~Energy efficient class~~		
~~75~~	~~Starting Current as % of FLC~~	~~600% subject to IS tolerances.~~	
~~76~~	~~Method of Starting~~	~~Motor shall be capable of starting with DOL~~	
~~77~~	~~Method of cooling~~	~~IC 411(TEFC) /IC 511(TETV) /IC 611(CACA) / (CACW)~~	
~~78~~	~~Class of Insulation & Temp. rise~~	~~Class F with Temperature rise ltd. to class B~~	
~~79~~	~~Space Heater~~	~~Required for all motors 30 kw and above~~	
~~80~~	~~Degree of protection/Canopy Required~~	~~IP 55/Yes~~	
~~81~~	~~TB Short time-Current & Short time-Time~~	~~40 kA , 0.25 Sec~~	
~~82~~	~~TB To be provided on the right hand side as viewed from the drive end.~~		
~~83~~	~~Cable, Cable glands & Lugs~~	~~Pl refer annexure-6.~~ ~~Accordingly suitable double compression Nickel plated brass cable glands and Tinned copper lugs to be provided by the bidder.~~	
~~84~~	~~No. of Starts~~	~~Two hot starts in succession with motor initially at normal running temperature.~~	
~~85~~	~~Bearing RTDs, Winding RTDs & TGs~~	~~a) Twelve (12) nos. simplex type winding temperature detectors, four (4) nos. per phase.~~ ~~b) Duplex type temperature detectors for each bearing~~ ~~c) 1 No. Dial Type Thermometer with adjustable alarm contact for each bearing.~~ ~~The temperature detector mentioned above shall be resistance type, 3 wire, platinum wound, 100 Ohms at 0 Deg C.~~	
~~86~~	~~Noise~~	~~85 DBA at 1 m distance, in any direction~~	
~~87~~	~~Vibration~~	~~As per IS12075/IEC 60034-14~~	
	DIESEL ENGINE DETAILS FOR ENGINE DRIVEN PUMPS [For details pl refer Annexure-5 & TAC guide lines]		
88	Drive	Diesel Engine	
89	BKW at the rated point		
90	BKW at end of curve		
91	Slected drive rating: The continuous engine brake horse power rating (after accounting for all auxiliary power consumption) at the site conditions shall be at least 20% greater than the brake horse power required to drive the pump at it's duty point at rated R.P.M. and in no case less than the brake horse power required to drive the pump at 150% of rated discharge or at any condition of operation of pump. Deaerating Factors considered by the manufacturer to arrive at the shaft power of the diesel engine at site, shall not be less than as mentioned below: a. Refer Cl. 11.2.2.4 of NFPA 20(2010 Den), A deduction of 3 percent from engine horsepower rating at standard SAE conditions shall be made for diesel engines for each 1000 ft (300 m) of altitude above 300 ft (91 m). b. Refer Cl. 11.2.2.5 of NFPA 20(2010 Den), A deduction of 1 percent from engine horsepower rating as corrected to standard SAE conditions shall be made for diesel engines for every 10°F (5.6°C) above 77°F (25°C) ambient temperature.	Bidder to mention engine HP rating for the motor duly taking care of the requirements.	
92	Drive Standard	IS -10000, BS- 5514 and as per standard practice of diesel engine manufacturer's association of USA. Selection, Design and construction of the diesel engine shall be guided by the TAC recommendations.	
93	Name of Manufacturer	Bidder to furnish.	
94	Model No	Bidder to furnish.	
95	Duty	Intermittent. However, same shall be capable of operating continuously on full load at the site elevation for a period of six hours.	
96	Speed		
97	Type of cooling		
98	Noise	105 DBA at 1 m distance, in any direction	
99	Vibration	As per IS standard	
	Gear Box [Applicable for Diesel Engine Driven Pump]		
100	Design Standard	Gear drive make shall be proven and reputed make. The OEM of geam Drive should have supplied atleast 3 Nos of Gear Boxes for similar application in the last 5 years and should be a regular manufacturer.	
101	Make	Bidder to furnish standard OEM.	
102	Model No.	Bidder to furnish	

Annexure-3 : Motor Specification

SECTION–3.16: MOTORS

1.0.0 INTENT OF SPECIFICATION

This section covers the technical requirements of HT motors, LT Motors and DC motors.

2.0.0 CODES AND STANDARDS

The equipment to be furnished under this specification shall be in accordance with the applicable section of the latest edition (including amendments) of the following Indian Standards (IS), IEC publications and other codes except where modified and /or supplemented by this specification.

a)	IS: 325	Three phase induction motors
b)	IS: 12615	Energy efficient induction motors
c)	IS: 900	Code of practice for installation and maintenance of induction motors
d)	IS: 996	Single-phase AC induction motor for general purpose
e)	IS: 1231	Dimensions of three-phase foot-mounted induction motors
f)	IS: 2223	Dimensions of flange mounted AC induction motors
g)	IS: 4029	Guide for testing three-phase induction motors
h)	IS: 8789	Values of performance characteristics for three-phase induction motors
i)	IS: 13555	Guide for selection and application of 3-phase AC induction motors for different types of driven equipment
j)	IS: 5571	Guide for selection of electrical equipment for hazardous areas
k)	IS: 12065	Permissible limits of noise level for rotating electrical machines
l)	IS: 12075	Mechanical vibration of rotating electrical machines
m)	IS 60034-5	Degree of protection provided by Integral design of rotating electrical machines
n)	IS 60034-8	Terminal marking and direction of rotation
o)	IS 60079-1	Equipment protection by flame proof enclosure
p)	IS 60034-1	Rotating electrical machines.
q)	IS 60079	Explosive atmospheres
r)	IS/IEC 60529	Degrees of protection provided by enclosures (IP code)
s)	IEC 60034	Rotating electrical machines.
t)	IS 3177	Code of practice for Design, Manufacture, Erection and testing of Cranes and Hoists

3.0.0 TECHNICAL REQUIREMENTS

3.1.0 Design ambient temperature

Motors shall be suitable for an ambient temperature of 50 degree C and relative humidity of 95% and shall deliver the rated output without exceeding its guaranteed temperature limits.

3.2.0 Supply voltage

Motors rated up to and including 415 V are termed as LT motors and the motors rated higher than 415 V are termed as HT motors.

Motors shall be capable of delivering the rated output under following voltage and frequency variations without exceeding its guaranteed temperature limits.

- Frequency variation : (+) 3% and (-) 5%
- Voltage variation for LT motors : (±) 10%
- Voltage variation for HT motors : (±) 6%
- Combined variation of voltage and frequency : 10% (absolute sum)

All the motors shall be so designed that maximum inrush currents, locked rotor torque and pullout torque developed at extreme voltage and frequency variations do not endanger the motor and the driven equipment.

3.3.0 System Parameters

Sl. No.	Description	11 kV and 6.6 kV System	LT System
1.	Voltage level	6.6 kV : Above 200 kW and upto 2000 kW 11 kV: Above 2000 kW	240 V : up to 0.2 kW 415 V: >0.2 kW and up to 200 kW.
2.	System earthing	Earthed through resistance, limiting earth fault current to 300 Amps	415 V system solidly grounded.
3.	Fault withstand rating of motor terminal box (Breaker operated)	50 kA for 0.2 sec for 11 kV and 31.5 kA for 0.2 sec for 6.6 kV	415 V system : 50/65 kA for 0.2 second

3.4.0 Type

AC Motors shall be squirrel cage induction type unless otherwise it is specified.

3.5.0 Duty

- All AC motors shall be squirrel cage three phase/single phase induction motors. All the motor shall be designed for bi-directional rotation.
- All the motors shall be rated for S1 duty for continuous operation. Motors of crane and hoist application shall be intermittent duty.
- DC motor shall generally be of shunt wound type rated for 220 V DC.
- Motors shall be suitable for installation in hot, humid and tropical atmosphere and polluted at places with coal ash and or fly ash.
- The motors shall be suitable for bus transfer schemes provided on the 11 kV/6.6 kV/415 V systems without any injurious effect on its life.

3.6.0 Design margin

Whenever the basis for motor rating are not specified in the corresponding mechanical specification section maximum continuous motor rating shall be atleast 10% above the maximum load derived of the driven equipment under entire operating range including voltage & frequency variation.

The motor characteristics shall match the requirements of the driven equipment so that adequate starting, accelerating; pull up, breakdown and full load torques are available for the intended service.

Service shall be considered as 1.0 only.

3.7.0 Method of Starting

- All the motors shall be suitable for direct on-line starting on full load. Where variable voltage and variable frequency (VVFD) operation is envisaged through VVFD drives, motors shall be specially designed for such application.
- LT motors rated up to 125 kW shall be controlled through MPCB/MCCB and contactor. LT motors rated more than 125 kW shall be controlled through air circuit breaker.
- HT Motors shall be controlled through vacuum circuit breaker.

3.8.0 Efficiency

All the duty motors shall be energy efficient type. For HT and LT motors, it shall be IE3 class as per IS 12615. For VFD controlled HT and LT motors, it shall be IE2 class as per IS 12615.

3.9.0 Temperature rise

- Winding Insulation shall be Class F.
- Temperature rise of air cooled motors shall not exceed 70°C over air temperature of 50°C by resistance method, while delivering its maximum rated output.
- Temperature rise of water cooled motors shall not exceed 80°C over inlet cooling water temperature by resistance method, while delivering its maximum rated output.

3.10.0 Starting voltage

a) Motors shall be capable of starting and accelerating the load at following starting voltage, with direct on-line starting, without exceeding specified winding temperatures.

- HT Motors (up to 1000 kW) : 85% of rated voltage
- HT Motors (> 1000 kW up to 4000 kW) : 80% of rated voltage
- HT Motors (> 4000 kW) : 75% of rated voltage
- LT motors : 80% of rated voltage

b) During fast changeover of power supply source, vector difference between the motor residual voltage and the incoming supply voltage shall be about 150% of the rated voltage and the motors shall withstand voltage stress and torque stress developed during that time, which may last for a period of one (1) second.

c) The motor shall be capable of operating at full load at a supply voltage of 75% of the rated voltage for 5 minutes.

3.11.0 No. of Starts

Continuous duty motors shall be suitable for the following starting requirements under the specified conditions of load, torque and inertia.

- No. of consecutive hot starts shall be 2 (with initial temperature of the motor at full load operating level).
- No. of consecutive cold starts shall be 3 (with initial temperature of the motor at ambient temperature).
- For conveyor motors, no. of consecutive hot starts shall be 3 (with initial temperature of the motor at full load operating level).

3.12.0 Starting current

- Locked rotor current of HT motors for applications other than listed below shall be limited to 600% of the full load current, and is subject to IS tolerance.
- For energy efficient LT motors, locked rotor current shall be as per IS: 12615.
- Locked rotor current of the VFD controlled AC motors shall be limited to 300% of the full load current, and is subject to IS tolerance.
- Locked rotor current of the BFP motors shall be limited to 450% of the full load current of the motor, and is subject to IS tolerance.

3.13.0 Locked rotor withstand time

- The locked rotor withstand time for HT motors under hot conditions at 110% rated voltage shall be more than the starting time at minimum permissible voltage specified above by atleast three seconds or 15% of the accelerating time whichever is greater. Provision of speed switch shall be avoided to the extent possible. In case the speed switch is required, it shall be indicated by the bidder in his offer
- For the LT motors having starting time up to 20 seconds at minimum permissible voltage, the locked rotor withstand time under hot condition at highest voltage limit shall be at least 2.5 seconds more than the starting time.
- For the motors having starting time more than 20 seconds and up to 45 seconds at minimum permissible voltage, the locked rotor withstand time under hot condition at highest voltage limit shall be at least 5 seconds more than the starting time.
- For motors having starting time more than 45 seconds at minimum permissible voltage, the locked rotor withstand time under hot condition at highest voltage limit shall be more than starting time by at least 10% of the starting time.
- Speed switches mounted on the motor shaft shall be provided in cases where above requirements are not met.
- When a speed switch is mounted on the motor shaft, the same shall remain closed for speeds lower than 20% and open for speeds above 20% of the rated speed. The speed switch shall be capable of withstanding 120% over speed in either direction of rotation.

3.14.0 Torque Requirements

- Accelerating torque at any speed with the lowest permissible starting voltage shall be at least 10% motor full load torque.
- Pull out torque at rated voltage shall not be less than 205% of full load torque.
- Motors subjected to reverse rotation shall be designed to withstand the stresses encountered when starting with non-energized shaft rotating at 125% of rated speed in reverse direction.

3.15.0 Enclosure

a) Motors shall have IP 55 degree of protection.

b) For hazardous location, the enclosure of motors shall following have flame proof construction conforming to applicable standard.
   - Fuel oil area Group – IIB
   - Hydrogen generation plant area : Group – IIC)

3.16.0 Cooling

- LT motors shall be totally enclosed fan cooled (TEFC), type IC411. The cooling shall be effected by self-driven bi-directional centrifugal fan protected by fan cover.
- HT motors can be totally enclosed fan cooled (TEFC) or totally enclosed tube ventilated (TETV) or closed air circuit air cooled (CACA-IC6A1A1) type.
- Motors rated >3000 kW can be closed air circuit water cooled (CACW).
- Motors with CACA/CACW heat exchangers shall have dial type thermometer with adjustable alarm contacts to indicate the following:

  -Hot and cold air temperatures of the closed air circuit for CACA motors.

  -Hot and cold, air and water temperatures for CACW motors.
- The Alarm switch contact rating shall be minimum 0.5 A at 220 V DC and 10 A at 230 V AC.

3.17.0 Winding

- Winding shall be class F insulation with temperature limited to class B. Insulation shall be Non-hygroscopic, oil resistant, and flame resistant. Winding, fittings and hardware shall be corrosion resistant. Winding shall be tropicalized and suitably varnished, baked and treated for operating satisfactorily in humid and corrosive atmosphere.
- For the VFD operated drives, insulation shall be designed to take care of stresses due to high DV/DT. Motors shall be wound with dual coated winding wires and impregnated with VPI process. Further for such application, insulated bearings shall be provided to avoid circulating current caused by shaft induced voltages.
- Space heaters rated for 240 V AC, 50 Hz supply shall be provided for motors rated 30 kW and above to maintain windings in dry condition when motor is standstill.
- For HT motors, insulation shall be Vacuum Impregnated (VPI).
- HT motors shall withstand one minute power frequency voltage test or 1.2/50 micro sec lightning impulse Voltage wave of 4U+5 kV (U=Line voltage in kV) test on main insulation as per IEC 600034-15. The coil inter-turn insulation shall withstand steep front impulse withstand voltage as per IEC 600034-15.
- For HT motors, 12 nos. simplex or 6 nos. duplex RTDs (two per phase), each having D.C. resistance of 100 ohms at 0℃, embedded in the stator winding at locations where highest temperatures may be expected, shall be provided. The material of the ETD's shall be platinum.

3.18.0 Bearings

- Motor shall be provided with antifriction bearings, unless sleeve bearings are required by the motor application. Bearings shall be provided with seals to prevent leakage of lubricant or entrance of foreign matters like dirt, water etc. into the bearing area.
- Sleeve bearings shall be split type, ring oiled with permanently aligned, close running shaft sleeves. Grease lubricated bearings shall be pre-lubricated and shall have provisions for in-service positive lubrication with grease nipple and relief holes. For sleeve bearings, the bearing housing shall be preferably in end shield itself.
- Vertical shaft motors shall be provided with thrust and guide bearings. Thrust bearing of tilting pad type is preferred. However, if anti-friction bearings can take vertical thrust, thrust and guide bearings are not required.

- Lubricant shall not deteriorate under all service conditions. The lubricants shall be limited to normally available types. For motors rated 30 kW and above re-lubrication facility shall be provided.
- For motor with forced lubrication, a shaft driven oil pump shall be provided along with an electrical auxiliary pump. Alternatively, two motor driven pumps may be provided, one working and one standby. All necessary auxiliaries and accessories shall be provided to complete the system. A pressure gauge and pressure switch for low oil pressure warning and to start the standby oil pump automatically shall also be provided. A motor driven jacking oil pump may be provided, for heavy shaft loads.
- Flow switches shall be provided for monitoring oil flow of forced lubrication bearings, if used. Alarm switch contact rating shall be minimum 0.5 A at 220 V DC and 10 A at 230 V AC.
- For bearing temperature measurement, duplex RTDs shall be provided for each bearing and shall be wired up to the terminal box.
- Each bearing shall be provided with dial type thermometer.
- For all VFD operated motors shall have insulated bearings to prevent flow of shaft currents.
- For motors rated above 1000 KW having shaft length more than 1.5 M shall have insulated bearings to prevent flow of shaft currents.
- All the motors rated <15 kW shall be provided with sealed ZZ bearings.
- Lub oil pressure transmitters shall be provided to DCS for remote monitoring. Lub oil pressure very low trip to HT equipment shall be 2 out of 3 logic.

3.19.0 Terminal Boxes

- Separate terminal boxes of IP 55 degree of protection shall be provided for stator leads. For single core cables, gland plate shall be non-magnetic material. Terminal box of HT motors shall be capable of being turned 360° in steps of 180°. Terminal box of LT motors shall be capable of being turned 360° in steps of 90°. The terminal boxes shall be split type with removable cover with access to connections.
- Terminals for motors shall be stud type, thoroughly insulated from the frame. The terminals shall be clearly identified by phase markings, with corresponding direction of rotation marked on the non-driving end of the motor.
- The terminal box shall be capable of withstanding maximum system fault current for 0.2 sec for all breaker operated motors and shall be provided with explosion vent.
- For contactor operated LT motors, the terminal box shall be capable of withstanding the fault current for 0.2 sec minimum and operating time of MPCB/MCCB.
- Removable gland plates of thickness not less than 2.5 mm sheet steel or 3 mm aluminium (for single core cables) shall be provided for cable boxes.
- Cable spreader box shall be provided for larger cable sizes.
- Cable boxes of HT motors shall be phase segregated type. The terminals of three phases shall be segregated by barriers of metal or fiber glass. For HT motors, cable box design shall be suitable for accommodating cable termination kits.
- Separate terminal box for space heaters shall be provided.
- A separate terminal box of IP 55 degree of protection shall be provided for temperature detectors.
- Motors rated >1000 kW shall be provided with neutral current transformers of PS class on each phase for differential protection in neutral side terminal box. The three phases shall be connected to form the star point after passing through the CTs. The CT details shall be

finalized during detail engineering. Neutral terminal box shall have IP 55 degree of protection.

- The secondary leads of CT shall be wired to separate auxiliary terminal box of IP 55 degree of protection
- All the accessory terminal boxes shall be located on the same side of the main (power) terminal box.
- For LT motors, terminal box shall be located on top, unless otherwise specified.

3.20.0 Earthing Terminals

The frame of each motor shall be provided with two separate and distinct grounding pads complete with tapped hole, GI bolts and washer. The terminal box shall have a separate grounding terminal.

3.21.0 Noise and Vibration

- Motors shall be selected with low noise levels in accordance with IS 12065.
- The peak amplitude of the vibration shall also be within the specified limits of IS: 12075.
- All HT motors shall be provided with vibration pads for mounting vibration detectors.

3.22.0 Name Plates

Motor shall have stainless steel nameplate(s) showing diagram of connections, all particulars as per IS: 325 / IS: 12615 and shall also have 'BEE' marking.

In addition to the minimum information required by IEC/IS, the following information shall be shown on motor rating plate:

- Temperature rise in ºC under rated condition and method of measurement.
- Degree of protection.
- Bearing identification no. and recommended lubricant.
- Location of insulated bearings.

3.23.0 Canopy

Canopy shall be provided for all the motors located outdoor. For details, please refer Civil section.

4.0.0 DC MOTORS

DC motors shall be provided where specified/required. DC Motors shall be sized for operation with fixed resistance starting for reliability. DC motors shall be shunt wound type. Motors shall be capable of delivering the rated output at 220 V DC with (+) 10% and (-) 15% variations without exceeding its guaranteed temperature limits. 220 V DC system shall be unearthed. Starting current of the DC motors shall be limited to 200% of the full load current of the motor, and is subject to IS tolerance. DC Motors shall be similar to AC Motors with respect to other features like enclosure type, cooling and class of insulation.

5.0.0 INSTALLATION

Installation shall be carried out as per IS: 900.

6.0.0 PAINTING

Painting shall be carried out by an approved process. Pretreatment shall conform to applicable standard. The equipment shall be subject to a coat of red oxide primer paint. All inside and

outside surface shall be painted with epoxy based paint. The final thickness of paint film on steel shall not be less than 100 microns. Finish shade shall be 631 of IS: 5 (smoke grey).

7.0.0 TESTING AND INSPECTION

7.1.0 Equipment offered shall be of type tested and proven type. Type test certificates for test conducted earlier on similar rating shall be furnished for the motors rated 30 kW and above.

7.2.0 The following type tests shall be conducted on LT motors.

- Measurement of resistance of windings of stator and wound rotor.
- No load test at rated voltage to determine input current power and speed
- Full load test to determine efficiency power factor and slip.
- Temperature rise test.
- Momentary excess torque test.
- High voltage test.
- Test for vibration severity of motor.
- Test for noise levels of motor
- Test for degree of protection
- Over speed test.

7.3.0 The following additional type tests shall be conducted on HT motors.

- No load saturation and loss curves up to approximately 115% of rated voltage
- Measurement of noise at no load.
- Momentary excess torque test
- Full load test
- Temperature rise test at rated conditions.
- Lightning Impulse withstand test on the sample coil shall be as per IEC-60034, part-15
- Surge-withstand test on interturn insulation shall be as per clause no. 5.1.2 of IEC 60034, part-15
- Degree of protection test for the enclosure followed by IR, HV and no load run test.
- Terminal box-fault level withstand test for each type of terminal box.

7.4.0 The following routine tests shall be carried out for the motors as per applicable standards.

- IR of Winding before and after HV tests
- HV test on main winding space heater, RTD, BTD
- Resistance measurement
- No load run test Major Electrical
- Phase sequence and direction of rotation
- Vibration check Major Electrical
- Reduced voltage running test
- Locked rotor test at reduced voltage
- Record of RTD & BTD resistance at the end of no load test
- Test on space heater & RTD
- Visual Control of terminal box and verification of construction with respect to short tested terminal box

7.5.0 The following minimum tests/ checks shall be conducted at site. Any other tests/ checks as per the manufacturer's recommendation shall also be carried out

- Measurement of vibration.
- Measurement of insulation resistance and polarization index.
- Measurement of full load current.
- Test running of the motors, checking the temperature rise and identifying the hot spot etc.

8.0.0 DRAWINGS & DOCUMENTS

The following drawings and documents shall be submitted for approval during detail engineering stage.

- Motor sizing calculation
- Technical particulars
- General arrangement drawings
- Performance curves (Efficiency, power factor, starting current)
- Characteristic curves (Speed torque, Hot/cold with stand time, Negative sequence current)
- Terminal box details
- Test reports
- Sub-vendor list
- Manufacturing quality plan
- Field quality plan

Annexure-4A

	BHARAT HEAVY ELECTRICALS LIMITED				
	PROJECT ENGINEERING & SYSTEMS DIVISION				
	PRICE FORMAT (R00) FOR HYDRANT AND SPRAY WATER PUMP WITH DRIVES **(MOTOR & DIESEL ENGINE)[Annexure-4A to Doc. No.PY-51497]** **FOR PROJECT: 2 X 660 MW TANGEDCO UDANGUDI STPP, STAGE-1** **CUSTOMER: TAMILNADU GENERATION AND DISTRIBUTIION CORPORATION** **CONSULTANT: FICHTNER CONSULTING ENGINEERS (INDIA) PRIVATE LIMITED CHENNAI, INDIA**				
SL NO	ITEM DESCRIPTION	QTY	UNIT	UNIT RATE (RS.)	TOTAL (RS.)
	Bidder's Name : <Bidder to indicate>				
I	**MAIN OFFER**				
A	**MATERIAL SUPPLY: HYDRANT-SPRAY WATER PUMP WITH MOTOR**				
A.1	Hydrant water Pump along with drive motor assembly complete with all accessories as per specification. HT Motors are excluded from Bidder Scope of Supply.	3	Set		
A.2	Spray water Pump along with drive motor assembly complete with all accessories as per specification - HT Motor is excluded from Bidder Scope of Supply.	1	Set		
A.3	**Commissioning Spares-Hydrant water Pump**				
	Commissioning spares as per manufacturer's recommendation. Minimum 1 Set of O rings & gaskets, for each pump & 1 Set of Comissioning spares for drive as per Manufacturer recommendation. 1 set stands for requirement for one no. of pump/drive assembly Bidder to furnish the list along with the offer. **(Ref. Note-7)** Commissioning Spares for HT Motors are excluded from Bidder Scope of Supply.	3	Set		
A.4	**Commissioning Spares-Spray water Pump**				
	Commissioning spares as per manufacturer's recommendation. Minimum 1 Set of O rings & gaskets, for each pump & 1 Set of Comissioning spares for drive as per Manufacturer recommendation. 1 set stands for requirement for one no. of pump/drive assembly Bidder to furnish the list along with the offer. **(Ref. Note-7)** Commissioning Spares for HT Motor is excluded from Bidder Scope of Supply**.**	1	Set		
B	**MATERIAL SUPPLY: HYDRANT-SPRAY WATER PUMP WITH DIESEL ENGINE**				
B.1	Hydrant water pump along with Diesel Engine Complete with all accessories as per specification.	2	Set		
B.2	Spray water pump along with Diesel Engine Complete with all accessories as per specification.	1	Set		
B.3	**Commissioning spares-Hydrant water Pump**				
	Commissioning spares as per manufacturer's recommendation. Minimum 1 Set of O rings & gaskets, for each pump & 1 Set of Comissioning spares for drive as per Manufacturer recommendation. 1 set stands for requirement for one no. of pump/drive assembly Bidder to furnish the list along with the offer. **(Ref. Note-7)**	2	Set		
B.4	**Commissioning spares-Spray water Pump**				

	BHARAT HEAVY ELECTRICALS LIMITED				
	PROJECT ENGINEERING & SYSTEMS DIVISION				
	PRICE FORMAT (R00) FOR HYDRANT AND SPRAY WATER PUMP WITH DRIVES (MOTOR & DIESEL ENGINE)[Annexure-4A to Doc. No.PY-51497] **FOR PROJECT: 2 X 660 MW TANGEDCO UDANGUDI STPP, STAGE-1** **CUSTOMER: TAMILNADU GENERATION AND DISTRIBUTIION CORPORATION** **CONSULTANT: FICHTNER CONSULTING ENGINEERS (INDIA) PRIVATE LIMITED CHENNAI, INDIA**				
SL NO	ITEM DESCRIPTION	QTY	UNIT	UNIT RATE (RS.)	TOTAL (RS.)
	Bidder's Name : <Bidder to indicate>				
	Commissioning spares as per manufacturer's recommendation. Minimum 1 Set of O rings & gaskets, for each pump & 1 Set of Comissioning spares for drive as per Manufacturer recommendation. 1 set stands for requirement for one no. of pump/drive assembly Bidder to furnish the list along with the offer. **(Ref. Note-7)**	1	Set		
C	**Special tools & tackles**				
C.1	**Special tools & tackles for Pump and Motor**				
	Special tools & tackles as per manufacturer's recommendations. 1 set stands for requirement for each pump, drive and other accessories. Bidder to furnish the list along with offer. Special Tools and Tackles for HT Motors are excluded from Bidder Scope of Supply.	1	Set		
C.2	**Special tools & tackles for Pump and Diesel Engine**				
	Special tools & tackles as per manufacture recommendations. 1 set standas for requirement for each pump, drive and other accessories. Bidder to furnish the list along with offer.	1	Set		
D	**MANDATORY SPARES: COMMON FOR HYDRANT AND SPRAY PUMPS** **Note:Prices for individual items to be quoted as indicated in the price bid format.[Refer Note 8]**				
D.1	**For Hydrant & Spray Pump:**				
1	IMPELLER	1 NO. OF EACH TYPE AND SIZE	No.		
2	PUMP BEARINGS	1 NO. OF EACH TYPE AND SIZE	No.		
3	PUMP SHAFT	1 NO. OF EACH TYPE AND SIZE	No.		
4	BEARING RINGS(IF APPLICABLE)	2 SET. OF EACH TYPE AND SIZE	Sets		
5	SHAFT SLEEVES	2 SET. OF EACH TYPE AND SIZE	Sets		
6	BUSHINGS	2 SET. OF EACH TYPE AND SIZE	Sets		
7	BEARING HOUSING (IF PROVIDED)	2 SET. OF EACH TYPE AND SIZE	Sets		
8	COUPLING AND NUTS (WITH BUSHES)	2 SET. OF EACH TYPE AND SIZE	Sets		
D.2	**For Diesel Engine of Hydrant & Spray Pump:**				
1	FUEL INJECTION NOZZLE	2 SET. OF EACH TYPE AND SIZE	Sets		

Annexure-4A

	BHARAT HEAVY ELECTRICALS LIMITED				
	PROJECT ENGINEERING & SYSTEMS DIVISION				
	PRICE FORMAT (R00) FOR HYDRANT AND SPRAY WATER PUMP WITH DRIVES (MOTOR & DIESEL ENGINE)[Annexure-4A to Doc. No.PY-51497] **FOR PROJECT: 2 X 660 MW TANGEDCO UDANGUDI STPP, STAGE-1** **CUSTOMER: TAMILNADU GENERATION AND DISTRIBUTIION CORPORATION** **CONSULTANT: FICHTNER CONSULTING ENGINEERS (INDIA) PRIVATE LIMITED CHENNAI, INDIA**				
SL NO	ITEM DESCRIPTION	QTY	UNIT	UNIT RATE (RS.)	TOTAL (RS.)
	Bidder's Name : <Bidder to indicate>				
2	PISTON RING	1 COMPLETE SET FOR EACH CYLINDER.	Set		
3	FUEL FILTERS ELEMENTS AND SEALS	2 SETS	Sets		
4	LUBRICATING OIL FILTER ELEMENTS & SEALS	2 SETS	Sets		
5	ENGINE JOINTS, GASKETS AND HOSES	1 SETS	Set		
6	INLET VALVE	1 NO.	No.		
II	**Optional Items**	--	--		
E	**Supervison charges for erection & commissioning at site**				
E.1	Per diem rate for the supervision of Erection & commissioning of Hydrant-Spray Pump [Refer Note 12]	14	Days		
E.2	Travel expenses (inclusive of all other charges like visa fee (if applicable), insurance etc) from / to vendor works to site for Engineer per visit for supervision of erection & commissioning of Hydrant-spray Pump [Refer Note 12]	7	Visit		
E.3	Per diem rate for the supervision of Erection & commissioning of Diesel engine of Hydrant-Spray Pump(Diesel Engine driven) [Refer Note 12]	6	Days		
E.4	Travel expenses (inclusive of all other charges like visa fee (if applicable), insurance etc) from / to vendor works to site for Engineer per visit for supervision of erection & commissioning of Diesel Engine for Hydrant-Spray(Diesel Enginedriven) [Refer Note 12]	3	Visit		
F	**2 Years Recommended Spares**				
	Recommended spares list for two years normal operation along with unit price breakup for Pump, Drives & other accessories. **(List with price break up to be enclosed)** (1 set stands for quantity required for the replacement of one pump, drive (or) accessories)	As per List	Set		
	TOTAL				

Notes:

1) Bidder to quote strictly as per BHEL's NIT requirements.

2~~) Bidder to note that this is a LUMP SUM Turn Key Order. However~~

3) **Main offer** consists of those items which will be part of main order after successful bidder is identified. **Optional Items** consists

4) Prices quoted by bidders for items under **main offer : Sl. No. I [A to D]** will be considered for evaluation of lowest

5.a) For all items including Optional items, prices to be furnished in this prescribed price bid format only for each individual item. No

6) Bidder to quote the base rates only. All other commercial charges for packing, freight, transportation, insurance, taxes & duties

7 a.) Commissioning spares are those spares which are required at the time of commissioning and shall be recommended(as per

8)With respect to Mandatory Spares;

9) Reference document: BHEL Specification PY51497 R00 & all its annexures.

10) Unpriced price bid format indicating as quoted against each applicable item shall be submitted duly signed & stamped along

11) **In case the systems are being supplied from outside India**, reputed Third Party Inspection like Llyods or equivalent has to be

12) With respect to Supervision charges,Optional prices to be quoted by bidder ~~& the same shall be considered for L1 bidder~~

Annexure-4B

	BHARAT HEAVY ELECTRICALS LIMITED **R.C.PURAM, HYDERABAD-502032**				
	PROJECT ENGINEERING & SYSTEMS DIVISION				
	PRICE FORMAT (R00) FOR JOCKEY PUMP WITH DRIVE MOTOR **[Annexure-4B to Doc. No.PY-51497]** **FOR PROJECT: 2 X 660 MW TANGEDCO UDANGUDI STPP, STAGE-1** **CUSTOMER: TAMILNADU GENERATION AND DISTRIBUTIION CORPORATION** **CONSULTANT: FICHTNER CONSULTING ENGINEERS (INDIA) PRIVATE LIMITED CHENNAI, INDIA**				
SL NO	ITEM DESCRIPTION	QTY	UNIT	UNIT RATE (RS.)	TOTAL (RS.)
	Bidder's Name : <Bidder to indicate>				
I	**MAIN OFFER**				
A	**MATERIAL SUPPLY: JOCKEY PUMP WITH DRIVE MOTOR**				
A.1	Jockey Pump along with drive motor assembly complete with all accessories as per specification.	2	Set		
A.2	**Commissioning spares**				
	Commissioning spares as per manufacturer's recommendation. Minimum 1 Set of O rings & gaskets, for each pump & 1 Set of Comissioning spares for drive as per Manufacturer recommendation. 1 set stands for requirement for one no. of pump and drive assembly Bidder to furnish the list along with the offer. **(Ref. Note-7)**	2	Set		
B	**NIL**				
C	**Special tools & tackles**				
C.1	**Special tools & tackles for Pump and Motor**				
	Special tools & tackles as per manufacture recommendations. 1 set stands for requirement for each pump, drive and other accessories. Bidder to furnish the list along with offer.	1	Set		
D	**MANDATORY SPARES:** **Note:Prices for individual items to be quoted as indicated in the price bid format.[Refer Note 8]**				
D.1	**For Jockey Pump:**				
1	IMPELLER	1 NO. OF EACH TYPE AND SIZE	No.		
2	PUMP BEARINGS	1 NO. OF EACH TYPE AND SIZE	No.		
3	PUMP SHAFT	1 NO. OF EACH TYPE AND SIZE	No.		
4	BEARING RINGS(IF APPLICABLE)	2 SET. OF EACH TYPE AND SIZE	Sets		
5	SHAFT SLEEVES	2 SET. OF EACH TYPE AND SIZE	Sets		
6	BUSHINGS	2 SET. OF EACH TYPE AND SIZE	Sets		
7	BEARING HOUSING (IF PROVIDED)	2 SET. OF EACH TYPE AND SIZE	Sets		
8	COUPLING AND NUTS (WITH BUSHES)	2 SET. OF EACH TYPE AND SIZE	Sets		
II	**Optional Items**	--	--		
E	**Supervison charges for erection & commissioning at site**				
E.1	Per diem rate for the supervision of Erection & commissioning of Jockey Pump [Refer Note 12]	4	Days		

Annexure-4B

	BHARAT HEAVY ELECTRICALS LIMITED **R.C.PURAM, HYDERABAD-502032**				
	PROJECT ENGINEERING & SYSTEMS DIVISION				
	PRICE FORMAT (R00) FOR JOCKEY PUMP WITH DRIVE MOTOR **[Annexure-4B to Doc. No.PY-51497]** **FOR PROJECT: 2 X 660 MW TANGEDCO UDANGUDI STPP, STAGE-1** **CUSTOMER: TAMILNADU GENERATION AND DISTRIBUTIION CORPORATION** **CONSULTANT: FICHTNER CONSULTING ENGINEERS (INDIA) PRIVATE LIMITED CHENNAI, INDIA**				
SL NO	ITEM DESCRIPTION	QTY	UNIT	UNIT RATE (RS.)	TOTAL (RS.)
	Bidder's Name : <Bidder to indicate>				
E.2	Travel expenses (inclusive of all other charges like visa fee (if applicable), insurance etc) from / to vendor works to site for Engineer per visit for supervision of erection & commissioning of Jockey Pump [Refer Note 12]	1	Visit		
G	**2 Years Recommended Spares**				
	Recommended spares list for two years normal operation along with unit price breakup for Pump, Drives & other accessories. **(List with price break up to be enclosed)** (1 set stands for quantity required for the replacement of one pump, drive (or) accessories)	As per List	Set		
	TOTAL				

Notes:

1) Bidder to quote strictly as per BHEL's NIT requirements.

2) Bidder to note that this is a LUMP SUM Turn-Key Order. However
(a) Changes to the tender specification during execution of the project for successful operation of the system need to be carried out by bidder and commercial implications if any will be settled suitably.
(b) Unit rates quoted by bidder shall be applicable for any changes in BOQ during detailed engineering stage.

3) **Main offer** consists of those items which will be part of main order after successful bidder is identified. **Optional Items** consists of those items which need to be quoted by bidder but may or may not be ordered by BHEL. Bidders are instructed to provide the pricing details listed under **Main offe**r and **Optional items** as per the prescribed format.

4) Prices quoted by bidders for items under **main offer : Sl. No. I [A to D]** will be considered for evaluation of lowest bidder.However, BHEL reserves the right
(a) To include any of the optional items in scope of supply (as per customer contract requirements) and accordingly consider the same in evaluation. Any such scope increase and change in evalution will be intimated to vendor during technical evaluation(before price bid opening).
(b) To place PO for any of the Optional items with in the contract period.
Hence bidders need to mandatorily quote reasonable prices for all optional items considering such requirement and keep the validity of the prices till the end of contract period.

5.a) For all items including Optional items, prices to be furnished in this prescribed price bid format only for each individual item. No combined prices, common prices or any other format will be accepted and such bids may be liable for rejection.
5.b) Bidder must not change the indicated item description, quantity & units in the price bid format. Bidder should only fill the unit rates & total price.
5.c) Bidder to quote for all the items as per price bid format. Incomplete/partial offer may be liable for rejection.

6) Bidder to quote the base rates only. All other commercial charges for packing, freight, transportation, insurance, taxes & duties etc., shall be indicated separately.

7 a.) Commissioning spares are those spares which are required at the time of commissioning and shall be recommended(as per bidders experience) and quoted by bidder. However commissioning spares indicated in the price bid format shall be quoted as minimum. 7.b)
Commissioning spare consumed over and above the recommended commisioning spares, during commissioning shall be supplied free of cost by the equipment vendor.

Annexure-4B

	BHARAT HEAVY ELECTRICALS LIMITED **R.C.PURAM, HYDERABAD-502032**				
	PROJECT ENGINEERING & SYSTEMS DIVISION				
	PRICE FORMAT (R00) FOR JOCKEY PUMP WITH DRIVE MOTOR **[Annexure-4B to Doc. No.PY-51497]** **FOR PROJECT: 2 X 660 MW TANGEDCO UDANGUDI STPP, STAGE-1** **CUSTOMER: TAMILNADU GENERATION AND DISTRIBUTIION CORPORATION** **CONSULTANT: FICHTNER CONSULTING ENGINEERS (INDIA) PRIVATE LIMITED CHENNAI, INDIA**				
SL NO	ITEM DESCRIPTION	QTY	UNIT	UNIT RATE (RS.)	TOTAL (RS.)
	Bidder's Name : <Bidder to indicate>				

8)With respect to Mandatory Spares;
A) If any of above items indicated by the specified name are not applicable, bidder to offer alternative item serving the same function as per equipment's design and indicate below the item being replaced.
B) If bidder is not able to meet the above note, then bidder may mention "Not Applicable". However, if found applicable during detailed engg. stage or alternative item as per equipment design can serve the same function, bidder to supply the specified quantity with out any delivery and commercial implications to BHEL.

9) Reference document: BHEL Specification PY51497 R00 & all its annexures.

10) Unpriced price bid format indicating as quoted against each applicable item shall be submitted duly signed & stamped along with technical offer by bidder as a token of concurrence that prices are submitted in this format only. The offer shall be liable for rejection in case if un-priced price bid format is not submitted or any modification is carried out in price bid format.

11) **In case the systems are being supplied from outside India**, reputed Third Party Inspection like Llyods or equivalent has to be considered and the charges should be included in the Main offer. For those bidders who are supplying from India, such third party inspection charges need not be considered and same will be arranged by BHEL/BHEL nominated inspection agency.

12) With respect to Supervision charges,Optional prices to be quoted by bidder but may or may not be ordered by BHEL.
Referring to Sl no E.1 TO E.2, Jockey pump, For the purpose of Quotation, total no of 2 man days for Pump will be covered in 1 visit [1 visit for each pump] have been considered.
payment against Sl.No E.1 TO E.2 above shall be made as per the actual number of visits and man days required for the supervision of the complete E&C activities as per these diem rates.

~~Referring to Sl no E.3 TO E.4, Motor , For the purpose of Quotation, total no of 2 man days for Motor will be covered in 1 visit [1 visit for each motor] have been considered. Payment against Sl.No E.3 TO E.4 above shall be made as per the actual number of visits and man days required for the supervision of the complete E&C activities as per these diem rates~~

Annexure-4C

	BHARAT HEAVY ELECTRICALS LIMITED **R.C.PURAM, HYDERABAD-502032**				
	PROJECT ENGINEERING & SYSTEMS DIVISION				
	PRICE FORMAT (R00) FOR BOOSTER PUMP WITH DRIVES **(MOTOR & DIESEL ENGINE)[Annexure-4C to Doc. No.PY-51497]** **FOR PROJECT: 2 X 660 MW TANGEDCO UDANGUDI STPP, STAGE-1** **CUSTOMER: TAMILNADU GENERATION AND DISTRIBUTIION CORPORATION** **CONSULTANT: FICHTNER CONSULTING ENGINEERS (INDIA) PRIVATE LIMITED CHENNAI, INDIA**				
SL NO	ITEM DESCRIPTION	QTY	UNIT	UNIT RATE (RS.)	TOTAL (RS.)
	Bidder's Name : <Bidder to indicate>				
I	**MAIN OFFER**				
A	**MATERIAL SUPPLY: BOOSTER PUMP WITH MOTOR**				
A.1	Booster Pump along with drive motor assembly complete with all accessories as per specification.	1	Set		
A.2	**Commissioning Spares - Booster Pump with motor**				
	Commissioning spares as per manufacturer's recommendation. Minimum 1 Set of O rings & gaskets, for each pump & 1 Set of Comissioning spares for drive as per Manufacturer recommendation. 1 set stands for requirement for one no. of pump and drive assembly Bidder to furnish the list along with the offer. **(Ref. Note-7)**	1	Set		
B	**MATERIAL SUPPLY: BOOSTER PUMP WITH DIESEL ENGINE**				
B.1	Booster pump along with Diesel Engine Complete with all accessories as per specification.	1	Set		
B.3	**Commissioning Spares - Booster Pump with motor**				
	Commissioning spares as per manufacturer's recommendation. Minimum 1 Set of O rings & gaskets, for each pump & 1 Set of Comissioning spares for drive as per Manufacturer recommendation. 1 set stands for requirement for one no. of pump and drive assembly Bidder to furnish the list along with the offer. **(Ref. Note-7)**	1	Set		
C	**Special tools & tackles**				
C.1	**Special tools & tackles for Pump and Motor**				
	Special tools & tackles as per manufacture recommendations. 1 set stands for requirement for each pump, drive and other accessories. Bidder to furnish the list along with offer.	1	Set		
C.2	**Special tools & tackles for Pump and Diesel Engine**				
	Special tools & tackles as per manufacture recommendations. 1 set standas for requirement for each pump, drive and other accessories. Bidder to furnish the list along with offer.	1	Set		
D	**MANDATORY SPARES:** **Note:Prices for individual items to be quoted as indicated in the price bid format.[Refer Note 8]**				
D.1	**For Booster Pump:**				
1	IMPELLER	1 NO. OF EACH TYPE AND SIZE	No.		
2	PUMP BEARINGS	1 NO. OF EACH TYPE AND SIZE	No.		
3	PUMP SHAFT	1 NO. OF EACH TYPE AND SIZE	No.		
4	BEARING RINGS(IF APPLICABLE)	2 SET. OF EACH TYPE AND SIZE	Sets		
5	SHAFT SLEEVES	2 SET. OF EACH TYPE AND SIZE	Sets		
6	BUSHINGS	2 SET. OF EACH TYPE AND SIZE	Sets		
7	BEARING HOUSING (IF PROVIDED)	2 SET. OF EACH TYPE AND SIZE	Sets		
8	COUPLING AND NUTS (WITH BUSHES)	2 SET. OF EACH TYPE AND SIZE	Sets		
D.2	**For Diesel Engine of Booster Pump:**				
1	FUEL INJECTION NOZZLE	2 SET. OF EACH TYPE AND SIZE	Sets		
2	PISTON RING	1 COMPLETE SET FOR EACH CYLINDER.	Set		
3	FUEL FILTERS ELEMENTS AND SEALS	2 SETS	Sets		
4	LUBRICATING OIL FILTER ELEMENTS & SEALS	2 SETS	Sets		

Annexure-4C

BHARAT HEAVY ELECTRICALS LIMITED
R.C.PURAM, HYDERABAD-502032

PROJECT ENGINEERING & SYSTEMS DIVISION

PRICE FORMAT (R00) FOR BOOSTER PUMP WITH DRIVES
(MOTOR & DIESEL ENGINE)[Annexure-4C to Doc. No.PY-51497]
FOR PROJECT: 2 X 660 MW TANGEDCO UDANGUDI STPP, STAGE-1
CUSTOMER: TAMILNADU GENERATION AND DISTRIBUTIION CORPORATION
CONSULTANT: FICHTNER CONSULTING ENGINEERS (INDIA) PRIVATE LIMITED CHENNAI, INDIA

SL NO	ITEM DESCRIPTION	QTY	UNIT	UNIT RATE (RS.)	TOTAL (RS.)
	Bidder's Name : <Bidder to indicate>				
5	ENGINE JOINTS, GASKETS AND HOSES	1 SETS	Set		
6	INLET VALVE	1 NO.	No.		
II	**Optional Items**	--	--		
E	**Supervison charges for erection & commissioning at site**				
E.1	Per diem rate for the supervision of Erection & commissioning of Booster Pump [Refer Note 12]	2	Days		
E.2	Travel expenses (inclusive of all other charges like visa fee (if applicable), insurance etc) from / to vendor works to site for Engineer per visit for supervision of erection & commissioning of Booster Pump [Refer Note 12]	1	Visit		
E.3	Per diem rate for the supervision of Erection & commissioning of Motor for Booster Pump[Motor driven] [Refer Note 10]	2	Days		
E.4	Travel expenses (inclusive of all other charges like visa fee (if applicable), insurance etc) from / to vendor works to site for Engineer per visit for supervision of erection & commissioning of Motor for Booster Pump[Motor driven][Refer Note 12]	1	Visit		
E.5	Per diem rate for the supervision of Erection & commissioning of Diesel engine of Booster Pump(Diesel Engine driven) [Refer Note 12]	2	Days		
E.6	Travel expenses (inclusive of all other charges like visa fee (if applicable), insurance etc) from / to vendor works to site for Engineer per visit for supervision of erection & commissioning of Diesel Engine for Booster(Diesel Enginedriven) [Refer Note 12]	1	Visit		
F	**2 Years Recommended Spares**				
	Recommended spares list for two years normal operation along with unit price breakup for Pump, Drives & other accessories. **(List with price break up to be enclosed)** (1 set stands for quantity required for the replacement of one pump, drive (or) accessories)	As per List	Set		
	TOTAL				

Notes:

1) Bidder to quote strictly as per BHEL's NIT requirements.

2) Bidder to note that this is a LUMP SUM Turn-Key Order. However

3) **Main offer** consists of those items which will be part of main order after successful bidder is identified. **Optional Items** consists of those items which need to be quoted by bidder but may or may not be ordered by BHEL. Bidders are instructed to provide the pricing details listed under **Main offe**r and **Optional items** as per the prescribed format.

4) Prices quoted by bidders for items under **main offer : Sl. No. I [A to D]** will be considered for evaluation of lowest bidder.However, BHEL reserves the right
(a) To include any of the optional items in scope of supply (as per customer contract requirements) and accordingly consider the same in evaluation. Any such scope increase and change in evalution will be intimated to vendor during technical evaluation(before price bid opening).
(b) To place PO for any of the Optional items with in the contract period.
Hence bidders need to mandatorily quote reasonable prices for all optional items considering such requirement and keep the validity of the prices till the end of contract period.

5.a) For all items including Optional items, prices to be furnished in this prescribed price bid format only for each individual item. No combined prices, common prices or any other format will be accepted and such bids may be liable for rejection.
5.b) Bidder must not change the indicated item description, quantity & units in the price bid format. Bidder should only fill the unit rates & total price.
5.c) Bidder to quote for all the items as per price bid format. Incomplete/partial offer may be liable for rejection.

6) Bidder to quote the base rates only. All other commercial charges for packing, freight, transportation, insurance, taxes & duties etc., shall be indicated separately.

7 a.) Commissioning spares are those spares which are required at the time of commissioning and shall be recommended(as per bidders experience) and quoted by bidder. However commissioning spares indicated in the price bid format shall be quoted as minimum.
7.b) Commissioning spare consumed over and above the recommended commisioning spares, during commissioning shall be supplied free of cost by the equipment vendor.

8)With respect to Mandatory Spares;
A) If any of above items indicated by the specified name are not applicable, bidder to offer alternative item serving the same function as per equipment's design and indicate below the item being replaced.
B) If bidder is not able to meet the above note, then bidder may mention "Not Applicable". However, if found applicable during detailed engg. stage or alternative item as per equipment design can serve the same function, bidder to supply the specified quantity with out any delivery and commercial implications to BHEL

9) Reference document: BHEL Specification PY51497 R00 & all its annexures.

Annexure-4C

	BHARAT HEAVY ELECTRICALS LIMITED **R.C.PURAM, HYDERABAD-502032**				
	PROJECT ENGINEERING & SYSTEMS DIVISION				
	PRICE FORMAT (R00) FOR BOOSTER PUMP WITH DRIVES **(MOTOR & DIESEL ENGINE)[Annexure-4C to Doc. No.PY-51497]** **FOR PROJECT: 2 X 660 MW TANGEDCO UDANGUDI STPP, STAGE-1** **CUSTOMER: TAMILNADU GENERATION AND DISTRIBUTIION CORPORATION** **CONSULTANT: FICHTNER CONSULTING ENGINEERS (INDIA) PRIVATE LIMITED CHENNAI, INDIA**				
SL NO	ITEM DESCRIPTION	QTY	UNIT	UNIT RATE (RS.)	TOTAL (RS.)
	Bidder's Name : <Bidder to indicate>				

10) Unpriced price bid format indicating as quoted against each applicable item shall be submitted duly signed & stamped along with technical offer by bidder as a token of concurrence that prices are submitted in this format only. The offer shall be liable for rejection in case if un-priced price bid format is not submitted or any modification is carried out in price bid format.

11) **In case the systems are being supplied from outside India**, reputed Third Party Inspection like Llyods or equivalent has to be considered and the charges should be included in the Main offer. For those bidders who are supplying from India, such third party inspection charges need not be considered and same will be arranged by BHEL/BHEL nominated inspection agency.

12) With respect to Supervision charges,Optional prices to be quoted by bidder & the same shall be considered for L1 bidder evaluation.
Referring to Sl no E.1 TO E.2, Booster pump, For the purpose of Quotation, total no of 2 man days for Pump will be covered in 1 visit [1 visit for each pump] have been considered.
payment against Sl.No E.1 TO E.2 above shall be made as per the actual number of visits and man days required for the supervision of the complete E&C activities as per these diem rates.

Referring to Sl no E.3 TO E.4, Motor , For the purpose of Quotation, total no of 2 man days for Motor will be covered in 1 visit [1 visit for each motor] have been considered. Payment against Sl.No E.3 TO E.4 above shall be made as per the actual number of visits and man days required for the supervision of the complete E&C activities as per these diem rates.

Referring to Sl no E.5 TO E.6, Diesel Engine , For the purpose of Quotation, total no of 2 man days for Diesel Engine will be covered in 1 visit [1 visit for each Diesel Engine] have been considered. Payment against Sl.No E.5 TO E.6 above shall be made as per the actual number of visits and man days required for the supervision of the complete E&C activities as per these diem rates.

Purchase Order for supply of main items, (A to D) shall be placed by BHEL-Hyderabad. ~~For Supervisionof E&C,LOI shall be placed by PE&SD and PO By BHEL-PSSR~~

Annexure-4D

	BHARAT HEAVY ELECTRICALS LIMITED **R.C.PURAM, HYDERABAD-502032**				
	PROJECT ENGINEERING & SYSTEMS DIVISION				
	PRICE FORMAT (R00) FOR SEA WATER INTAKE PUMP WITH DIESEL ENGINE DRIVE **(DIESEL ENGINE)[Annexure-4D to Doc. No.PY-51495]** **FOR PROJECT: 2 X 660 MW TANGEDCO UDANGUDI STPP, STAGE-1** **CUSTOMER: TAMILNADU GENERATION AND DISTRIBUTIION CORPORATION** **CONSULTANT: FICHTNER CONSULTING ENGINEERS (INDIA) PRIVATE LIMITED CHENNAI, INDIA**				
SL NO	ITEM DESCRIPTION	QTY	UNIT	UNIT RATE (RS.)	TOTAL (RS.)
	Bidder's Name : <Bidder to indicate> **Bidder's Offer No. & Dt. : <Bidder to indicate>** **Bidder's Ref No. & Dt. :<Bidder to indicate>** **BHEL Enq. No. & date :<Bidder to indicate>**				
I	**MAIN OFFER** **[Note:Prices for individual items to be quoted as indicated in the price bid format.]**				
A	**MATERIAL SUPPLY: SEA WATER INTAKE PUMP WITH DIESEL ENGINE DRIVE**				
A.1	Sea Water Intake Pump(Vertical) along with Diesel Engine Complete with all accessories as per specification.	1	Set		
A.2	**Commissioning Spares-Sea Water Intake Pump(Vertical)**				
	Commissioning spares as per manufacturer's recommendation. Minimum 1 Set of O rings & gaskets, for each pump & 1 Set of Comissioning spares for drive as per Manufacturer recommendation. 1 set stands for requirement for one no. of pump/drive assembly Bidder to furnish the list along with the offer. **(Ref. Note-7)**	1	Set		
B	**Special tools & tackles**				
B.1	**Special tools & tackles for Pump and Diesel Engine**				
	Special tools & tackles as per manufacture recommendations. 1 set standas for requirement for each pump, drive and other accessories. Bidder to furnish the list along with offer.	1	Set		
C	**MANDATORY SPARES:** **Note:Prices for individual items to be quoted as indicated in the price bid format.[Refer Note 8]**				
C.1	**For Sea Water Intake Pump:**				
1	IMPELLER	1 NO. OF EACH TYPE AND SIZE	No.		
2	PUMP BEARINGS	1 NO. OF EACH TYPE AND SIZE	No.		
3	PUMP SHAFT	1 NO. OF EACH TYPE AND SIZE	No.		
4	BEARING RINGS(IF APPLICABLE)	2 SET. OF EACH TYPE AND SIZE	Sets		
5	SHAFT SLEEVES	2 SET. OF EACH TYPE AND SIZE	Sets		
6	BUSHINGS	2 SET. OF EACH TYPE AND SIZE	Sets		
7	BEARING HOUSING (IF PROVIDED)	2 SET. OF EACH TYPE AND SIZE	Sets		
8	COUPLING AND NUTS (WITH BUSHES)	2 SET. OF EACH TYPE AND SIZE	Sets		
C.2	**For Diesel Engine of Sea Water Intake Pump:**				
1	FUEL INJECTION NOZZLE	2 SET. OF EACH TYPE AND SIZE	Sets		
2	PISTON RING	1 COMPLETE SET FOR EACH CYLINDER.	Set		
3	FUEL FILTERS ELEMENTS AND SEALS	2 SETS	Sets		
4	LUBRICATING OIL FILTER ELEMENTS & SEALS	2 SETS	Sets		
5	ENGINE JOINTS, GASKETS AND HOSES	1 SETS	Set		
6	INLET VALVE	1 NO.	No.		
II	**Optional Items**	--	--		
E	**Supervison charges for erection & commissioning at site**				
E.1	Per diem rate for the supervision of Erection & commissioning of Sea Water Intake Pump [Refer Note 12]	2	Days		

BHARAT HEAVY ELECTRICALS LIMITED
R.C.PURAM, HYDERABAD-502032

PROJECT ENGINEERING & SYSTEMS DIVISION

PRICE FORMAT (R00) FOR SEA WATER INTAKE PUMP WITH DIESEL ENGINE DRIVE
(DIESEL ENGINE)[Annexure-4D to Doc. No.PY-51495]
FOR PROJECT: 2 X 660 MW TANGEDCO UDANGUDI STPP, STAGE-1
CUSTOMER: TAMILNADU GENERATION AND DISTRIBUTIION CORPORATION
CONSULTANT: FICHTNER CONSULTING ENGINEERS (INDIA) PRIVATE LIMITED CHENNAI, INDIA

SL NO	ITEM DESCRIPTION	QTY	UNIT	UNIT RATE (RS.)	TOTAL (RS.)
	Bidder's Name : <Bidder to indicate> **Bidder's Offer No. & Dt. : <Bidder to indicate>** **Bidder's Ref No. & Dt. :<Bidder to indicate>** **BHEL Enq. No. & date :<Bidder to indicate>**				
E.2	Travel expenses (inclusive of all other charges like visa fee (if applicable), insurance etc) from / to vendor works to site for Engineer per visit for supervision of erection & commissioning of Sea Water Intake Pump [Refer Note 12]	1	Visit		
E.3	Per diem rate for the supervision of Erection & commissioning of Diesel engine of Sea Water Intake Pump(Diesel Engine driven) [Refer Note 12]	2	Days		
E.4	Travel expenses (inclusive of all other charges like visa fee (if applicable), insurance etc) from / to vendor works to site for Engineer per visit for supervision of erection & commissioning of Diesel Engine for Sea Water Intake Pump(Diesel Engine driven) [Refer Note 12]	1	Visit		
F	**2 Years Recommended Spares**				
	Recommended spares list for two years normal operation along with unit price breakup for Pump, Drives & other accessories. **(List with price break up to be enclosed)** (1 set stands for quantity required for the replacement of one pump, drive (or) accessories)	As per List	Set		
	TOTAL				

Notes:

1) Bidder to quote strictly as per BHEL's NIT requirements.

2) ~~Bidder to note that this is a LUMP SUM Turn-Key Order. However~~
~~(a) Changes to the tender specification during execution of the project for successful operation of the system need to be carried out by bidder and commercial implications if any will be settled suitably.~~
(b) Unit rates quoted by bidder shall be applicable for any changes in BOQ during detailed engineering stage.

3) **Main offer** consists of those items which will be part of main order after successful bidder is identified. **Optional Items** consists of those items which need to be quoted by bidder but may or may not be ordered by BHEL. Bidders are instructed to provide the pricing details listed under **Main offe**r and **Optional items** as per the prescribed format.

4) Prices quoted by bidders for items under **main offer : Sl. No. I [A to C]** will be considered for evaluation of lowest bidder.However, BHEL reserves the right
(a) To include any of the optional items in scope of supply (as per customer contract requirements) and accordingly consider the same in evaluation. Any such scope increase and change in evalution will be intimated to vendor during technical evaluation(before price bid opening).
(b) To place PO for any of the Optional items with in the contract period.
Hence bidders need to mandatorily quote reasonable prices for all optional items considering such requirement and keep the validity of the prices till the end of contract period.

5.a) For all items including Optional items, prices to be furnished in this prescribed price bid format only for each individual item. No combined prices, common prices or any other format will be accepted and such bids may be liable for rejection.
5.b) Bidder must not change the indicated item description, quantity & units in the price bid format. Bidder should only fill the unit rates & total price.
5.c) Bidder to quote for all the items as per price bid format. Incomplete/partial offer may be liable for rejection.

6) Bidder to quote the base rates only. All other commercial charges for packing, freight, transportation, insurance, taxes & duties etc., shall be indicated separately.

7 a.) Commissioning spares are those spares which are required at the time of commissioning and shall be recommended(as per bidders experience) and quoted by bidder. However commissioning spares indicated in the price bid format shall be quoted as minimum.
~~7.b) Commissioning spare consumed over and above the recommended commisioning spares, during commissioning shall be supplied free of cost by the equipment vendor.~~

	BHARAT HEAVY ELECTRICALS LIMITED **R.C.PURAM, HYDERABAD-502032**				
	PROJECT ENGINEERING & SYSTEMS DIVISION				
	PRICE FORMAT (R00) FOR SEA WATER INTAKE PUMP WITH DIESEL ENGINE DRIVE **(DIESEL ENGINE)[Annexure-4D to Doc. No.PY-51495]** **FOR PROJECT: 2 X 660 MW TANGEDCO UDANGUDI STPP, STAGE-1** **CUSTOMER: TAMILNADU GENERATION AND DISTRIBUTIION CORPORATION** **CONSULTANT: FICHTNER CONSULTING ENGINEERS (INDIA) PRIVATE LIMITED CHENNAI, INDIA**				
SL NO	ITEM DESCRIPTION	QTY	UNIT	UNIT RATE (RS.)	TOTAL (RS.)
	Bidder's Name : <Bidder to indicate> **Bidder's Offer No. & Dt. : <Bidder to indicate>** **Bidder's Ref No. & Dt. :<Bidder to indicate>** **BHEL Enq. No. & date :<Bidder to indicate>**				

8)With respect to Mandatory Spares;
A) If any of above items indicated by the specified name are not applicable, bidder to offer alternative item serving the same function as per equipment's design and indicate below the item being replaced.
B) If bidder is not able to meet the above note, then bidder may mention "Not Applicable". However, if found applicable during detailed engg. stage or alternative item as per equipment design can serve the same function, bidder to supply the specified quantity with out any delivery and commercial implications to BHEL.

9) Reference document: BHEL Specification PY51495 R00 & all its annexures.

10) Unpriced price bid format indicating as quoted against each applicable item shall be submitted duly signed & stamped along with technical offer by bidder as a token of concurrence that prices are submitted in this format only. The offer shall be liable for rejection in case if un-priced price bid format is not submitted or any modification is carried out in price bid format.

11) **In case the systems are being supplied from outside India**, reputed Third Party Inspection like Llyods or equivalent has to be considered and the charges should be included in the Main offer. For those bidders who are supplying from India, such third party inspection charges need not be considered and same will be arranged by BHEL/BHEL nominated inspection agency.

12) With respect to Supervision charges,Optional prices to be quoted by bidder ~~& the same shall be considered for L1 bidder evaluation.~~
Referring to Sl no E.1 TO E.2, Sea Water Intake Pump, For the purpose of Quotation, total no of 12 man days for Pump will be covered in 6 visits [1 visit for each pump] have been considered. Payment against Sl.No E.1 TO E.2 above shall be made as per the actual number of visits and man days required for the supervision of the complete E&C activities as per these diem rates.

Referring to Sl no E.3 TO E.4, Diesel Engine , For the purpose of Quotation, total no of 6 man days for Diesel Engine will be covered in 3 visits [1 visit for each Diesel Engine] have been considered. Payment against Sl.No E.3 TO E.4 above shall be made as per the actual number of visits and man days required for the supervision of the complete E&C activities as per these diem rates.

Purchase Order for supply of main items, (A to C) shall be placed by BHEL-Hyderabad. ~~For Supervisionof E&C,LOI shall be placed by PE&SD and PO By BHEL-PSSR.~~

ANNEXURE-5A to PY-51497

CHECKLIST FOR OFFER FOR HYDRANT PUMP/ SPRAY WATER PUMP WITH DRIVES (~~MOTOR~~/DIESEL ENGINE)

S.No.	Description	Bidder's Reply
1.	**Bidder to confirm** that Performance requirement, Design and construction of the offered Pump model shall be guided by the TAC/LPA recommendations.	
2.	**Bidder to confirm** that Performance requirement, Design and construction of the offered Diesel Engine shall be guided by the TAC/LPA recommendations.	
3.	**Refer Annexure-2A of Tender Specification:** Datasheet of Hydrant and Spray Water Pump-~~Motor~~ & Engine Datasheet. Duly filled Annexure-2A is enclosed with bidder's offer as indicated in Pg 04 of 32 of Tender Specification, PY-51497. **Bidder to Confirm.** **Datasheets in other formats are strictly not accepted.**	
4.	**Refer Annexure-2A of Tender Specification:** As per S.No. 8, type of pump is Horizontal, Centrifugal type, Side Suction and Side discharge. **Bidder to Confirm.**	
5.	As per Cl. No. 6 of Tender Specification, PY-51497 and all its annexures, Scope of supply as per this clause shall be in bidder's scope. **Bidder to Confirm.** **Further offer submitted by bidders shall not be reviewed w.r.t scope.**	
6.	As per Cl. No. 6.1 of Tender Specification, PY-51497, Elevation of vent nozzle of pump from the bottom of the base plate shall not be more than 2300mm. Deviation in this is not acceptable. **Bidder to Confirm.**	
7.	**Cable Glands & Lugs:** As per Cl. No. 6.2.1 of Tender Specification, PY-51497, suitable power & control cable glands & lugs are **in** bidder scope of supply. **Bidder to Confirm.**	
8.	As per Cl. No. 6.2.2.4 of Tender Specification, PY-51497, 1 No. of suitable motor(ex-proof type) operated and 1No. of hand operated pumps are considered by the bidder. Deviation in this is not acceptable. **Bidder to Confirm.**	
9.	As per Cl. No. 6.2.2.5 of Tender Specification, PY-51497, minimum instrumentations indicated is considered by bidder in their scope of supply. Deviation in this is not acceptable. **Bidder to Confirm.**	

10.	As per Cl. No. 6.2.2.6 of Tender Specification, PY-51497, 15 m of exhaust piping with silencer & insulation with 6 Nos. of bends are included in bidder's scope of supply. The exhaust piping shall consist of bends, hood, bird screen etc. Deviation in this is not acceptable. **Bidder to Confirm.**	
11.	**HT Motor** HT Motors(04 Nos) for 3 Nos of Hydrant & 1 No of Spray Pumps are **excluded** from bidder Scope of Supply. However, bidder shall consider canopy with legs and other fixing accessories. Also suitable common base frame for pump and motor assembly shall be provided by bidder for mounting the HT motor at site. HT Motors(03 Nos) shall be supplied by BHEL directly to site. **Bidder to Confirm.**	
12.	**HT Motor** Bidder has considered 4 Nos of Canopies for HT Motors as per cl. No. 6.2.1 of Tender Specification, PY-51497 Deviation in this is not acceptable. **Bidder to Confirm.**	
13.	**Diesel Engine Control Panel:** As per cl. No. 6.2.2.2 of Tender Specification, PY-51497, PLC based control panel is considered by bidder. Stand for this panel is in purchaser scope. Deviation in this is not acceptable. **Bidder to Confirm.**	
14.	**Diesel Engine Control Panel:** All spare contacts/terminals on relays, control switches, limit switches or similar devices , dupex RTDs & Duplex T/Cs shall be wired to accessible terminal blocks for future connections. **Bidder to confirm.**	
15.	**Diesel Engine Control Panel:** As per cl. No. 6.2.2.2 of Tender Specification, PY-51497, Local Control Panel shall have feature of initiating 6 kick starts[1 first time and 5 Repeat starts] on receipt of start command from Remote. Deviation in this is not acceptable. **Bidder to Confirm.**	
16.	**RTD and Junction Box:** As per Cl. No. 6.10.1, 6.10.2, 6.10.3 of Tender Specification, PY-5128, RTDs and Junction Box are excluded from bidder scope of supply. **Bidder to Confirm.**	
17.	As per cl. No. 6.11 of Tender Specification, PY-51497, Hydrant and Spray Pump shall be tested by test bed motor (HT Motor), whereas Jockey Pump and Booster Pumps shall be tested by Job Motor (LT Motor). **Bidder to Confirm.**	

18.	**<u>Battery & Battery Charger:</u>** As per Cl. No. 6.2.2.7 of Tender Specification, PY-51497, battery [Lead Acid type] and battery charger is considered by bidder in their scope of supply. Deviation in this is not acceptable. **Bidder to Confirm.**	
19.	Bidder has considered 4 Nos of 12V Batteries for each Hydrant and Spray Pumps. **Bidder to Confirm.**	
20.	Each set of Batteries for Diesel Engine(2 x 12V) shall be capable of starting the Engine for 12 times minimum with out recharging. **Bidder to confirm**	
21.	**<u>Coupling between pump and drives [Motor/Engine] :</u>** As per Cl. No. 6.3 of Tender Specification, PY-51497, Coupling between pump and drives, [Motor/Engine] shall be BHEL Tender Specification. Accordingly coupling mandatory spares to be considered as per BHEL Tender Specification. Deviation in this is not acceptable. **Bidder to Confirm.**	
22.	Hydrant and spray pump parameters are identical and we understand that the offered model by the bidder shall be identical. Hence mandatory spares shall be common for the both the pumps. Details(Type and qty) of mandatory spares indicated in Annexure-4A shall be considered by the bidder. **Bidder to Confirm.**	
23.	As per Annexure-4A(Price Bid Format), mandatory spares for motors are not applicable. **Bidder to Confirm.**	
24.	As per Cl. No. 6.6 of Tender Specification, PY-51497, that all the Suitable reducers/expanders & counter flanges along with gaskets & stud nuts at all the terminal points are considered by bidder. Deviation in this is not acceptable. **Bidder to Confirm.**	
25.	As per Cl. No. 6.14 of Tender Specification, PY-51497, All the list of commissioning spares indicated in this clause are included in bidder's scope of supply. Any commissioning spare required over and above the recommended commissioning spares during commissioning shall be supplied free of cost by the equipment vendor. Deviation in this is not acceptable. **Bidder to Confirm.**	
26.	As per cl. No. 6.14 of Tender Specification, PY-51497, Commissioning spares for HT Motor are **excluded** from <u>bidder's scope of supply.</u> **Bidder to Confirm.**	
27.	As per cl. No. 6.17 of Tender Specification, PY-51497, Special Tools and tackles for HT Motor are **excluded** from <u>bidder's scope of supply.</u> **Bidder to Confirm.**	

28.	**<u>Auxiliaries Equipment/Spares:</u>** As per Cl. No. 6.16 of Tender Specification, PY-51497, all auxiliary equipment [clause no 7.4.5.7.3 of TAC] & spares [7.4.5.11 of TAC] as per TAC are included in bidder's scope of supply. Deviation in this is not acceptable. **Bidder to Confirm.**	
29.	As per Cl. No. 6.17 of Tender Specification, PY-51497, All the special tools and tackles indicated in this clause are included in bidder's scope of supply. Deviation in this is not acceptable. **Bidder to Confirm.**	
30.	2 year recommended spares list is enclosed with bidder's offer whose optional price is indicated in Annexure-4A(Price Bid Format). **Bidder to Confirm.**	
31.	As per Cl. No. 8 of Tender Specification, PY-51497, bidder is meeting the Equipment Qualification Criteria. All the references shall be submitted along with the offer as per Annexure-8 Deviation in this is not acceptable. **Bidder to Confirm.**	
32.	Painting schedule shall be as per Cl. No. 10 of Tender Specification, PY-51497. **Bidder to Confirm.**	
33.	**<u>Inspection, Testing requirements for Pump & Drive assembly:</u>** Inspection, Testing requirements shall be as per BHEL QAP & specification requirement only. Bidder to note that QAP shall be as per Annexure-7 & the same shall be discussed during detail engg. However in case of practical difficulties in meeting the quality requirement, same shall be mutually discussed & agreed during detail engg. Stage. **Bidder to note & confirm**.	
34.	**<u>Complete String Test as per QAP enclosed as Annexure-7</u>**: Complete unit test for the Pump shall be conducted (test bed motor for Hydrant-Spray Pumps and job motor for Booster & Jockey Pumps). String test is not applicable. **Bidder to confirm.**	
35.	Make of all the items shall be as per Annexure-9(Sub-Vendor List). **Bidder to confirm.**	
36.	Make of diesel engine shall be as per approved vendor list only. Equivalent make is not acceptable. **Bidder to confirm.**	
37.	As per Annexure-12, Make of Battery charger shall be OEM standard. However, bidder to ensure the reputed make & shall have Proven Track record for the same. **Bidder to confirm.**	
38.	**Bidder to confirm** compliance with Annexure-10, Master Document List enclosed with Tender Specification, PY-51497 wrt list of documents, schedule of submission.	
39.	Bidders to comment on the instrumentation requirement as per P&ID (Annexure -1) based on their experience. If any other instruments are required as per good engg practice, bidder to highlight & Consider the same.	
40.	Bidder shall submit Annexure-11 indicating as ***<u>NO DEVIATION</u>*** along with their offer. Any specific deviations, which are impractical, shall be raised in form of pre-bid queries as per Annexure-12 before submission of Techno Commercial offer. Any deviation/ queries raised during technical bid submission shall not be	

	entertained. **Bidder to Confirm.**	
41.	Bidder to quote as per Annexure-4A, Price Bid Format only. Price quoted as per the price bid format, clearly indicating all the applicable items are quoted, and not applicable items are clearly highlighted. Un priced copy of the same is enclosed with bidder's offer. **Bidder to check and confirm.**	
42.	Bidder to quote individual price for each item mentioned in the seal priced bid. **Bidder to check and confirm**.	
43.	Refer Annexure-2A of Tender Specification, PY-51497. The casing material mentioned in sl no 35 shall cater to the Hydraulic test pressure of casing Kg/cm²(g) as mentioned in sl no 54..If Not, bidder to consider superior material of casing. **Bidder to confirm.**	
44.	Bidder to confirm that the following documents are submitted along with their offer to enable BHEL to evaluate the offer. a) Duly filled in Pump-~~Motor~~-Diesel Engine datasheet **(Annexure-2A)** b) Tentative GAD / P&ID for Pump with ~~Motor~~ & Engine**(Stamped Copy of Annexure-1)** c) Performance curves for pump d) Un-priced copy of price in attached BHEL price bid formats**(Annexure-4A)** indicating quoted/ not quoted against each row & column. e) Equipment qualification criteria / PTR / Reference Lists f) Checklist as per **(Annexure-5A)** g) Deviation list [Indicating as No Deviation] as per **(Annexure-11)**	
45.	All important documents such as unpriced price bid, reference list, pump performance curve, Pump & drive assembly GA drawings, CS drawings must necessarily to be furnished by bidder along with their offer for evaluation. **Bidder to once again check their offer before submission and confirm.**	
46.	**BoQ for Main Equipment:** Bill of Quantity for Fire Water Pumps is enclosed with this checklist. This is the minimum BOQ identified by purchaser. However any other item required for successful commissioning of the fire water pump and drive assembly shall be considered by the bidder. Bidder to check and fill their confirmation whether the BoQ indicated is considered in their offer.	
47.	Refer Cl. No. 3.28 of Checklist(Annexure-5A) of Technical Specification, PY51497 Vibration pads to be supplied by the bidder**.** Deviation in this is not acceptable. **Bidder to Confirm.**	
48.	**BoQ for Commissioning Spares:** Bill of Quantity for Commissioning spares is enclosed with this checklist. Bidder to Confirm and furnish the list of commissioning spares considered by the bidder.	
49.	**BoQ for Special Tools and Tackles:**	

	Bill of Quantity for special tools and tackles is enclosed with this checklist. Bidder to Confirm and furnish the list of special tools and tackles considered by the bidder.	

SIGNATURE:
NAME:

DESIGNATION:

COMPANY:

DATE:

ANNEXURE-5B to PY-51497

CHECKLIST FOR OFFER FOR JOCKEY PUMP WITH DRIVES (MOTOR DRIVEN)

S.No.	Description	Bidder's Reply
1.	**Bidder to confirm** that Performance requirement, Design and construction of the offered Pump model shall be guided by the TAC/LPA recommendations.	
2.	**Bidder to confirm** that Performance requirement, Design and construction of the offered Motor shall be guided by the TAC/LPA recommendations.	
3.	**Refer Annexure-2B of Tender Specification:** Datasheet of Jockey Pump-Motor Driven. Duly filled Annexure-2B is enclosed with bidder's offer as indicated in Pg 04 of 24 of Tender Specification, PY-51497. **Bidder to Confirm.** **Datasheets in other formats are strictly not accepted.**	
4.	**Refer Annexure-2B of Tender Specification:** As per S.No. 8, type of pump is Horizontal, Centrifugal type, End Suction and Back Pullout.. **Bidder to Confirm.**	
5.	As per Cl. No. 6 of Tender Specification, PY-51497 and all its annexures, Scope of supply as per this clause shall be in bidder's scope. **Bidder to Confirm.** **Further offer submitted by bidders shall not be reviewed w.r.t scope.**	
6.	**Cable Glands & Lugs:** As per Cl. No. 6.2.1 of Tender Specification, PY-51497, suitable power & control cable glands & lugs shall be included in bidder scope of supply. Deviation in this is not acceptable. **Bidder to Confirm.**	
7.	As per Cl. No. 6.2.1 of Tender Specification, PY-51497, all LT Motors shall be of IE-3 type in-line with IS-12615. Deviation in this is not acceptable. **Bidder to Confirm.**	
8.	As per Cl. No. 6.2.2.5 of Tender Specification, PY-51497, minimum instrumentations indicated is considered by bidder in their scope of supply. Deviation in this is not acceptable. **Bidder to Confirm.**	
9.	NIL.	
10.	NIL.	

11.	**<u>Coupling between pump and drives [Motor] :</u>** As per Cl. No. 6.3 of Tender Specification, PY-51497, Coupling between pump and drives, [Motor] shall be BHEL Tender Specification. Accordingly coupling mandatory spares to be considered as per BHEL Tender Specification. Deviation in this is not acceptable. **Bidder to Confirm.**	
12.	As per Cl. No. 6.6 of Tender Specification, PY-51497, that all the Suitable reducers/expanders & counter flanges along with gaskets & stud nuts at all the terminal points are considered by bidder. Deviation in this is not acceptable. **Bidder to Confirm.**	
13.	As per Cl. No. 6.14 of Tender Specification, PY-51497, All the list of commissioning spares indicated in this clause are included in bidder's scope of supply. Any commissioning spare required over and above the recommended commissioning spares during commissioning shall be supplied free of cost by the equipment vendor. Deviation in this is not acceptable. **Bidder to Confirm.**	
14.	As per cl. No. 6.11 of Tender Specification, PY-51497, Hydrant and Spray Pump shall be tested by test bed motor (HT Motor), whereas Jockey Pump and Booster Pumps shall be tested by Job Motor (LT Motor). **Bidder to Confirm.**	
15.	As per Annexure-4B(Price Bid Format), mandatory spares for motors are not applicable. **Bidder to Confirm.**	
16.	LT Motor shall be IE-3 energy efficient class as per IS-12615(Latest Version). **Bidder to Confirm.**	
17.	Starting current requirements for LT Motor for IE-3 energy efficient class shall be as per IS-12615(Latest Edition). **Bidder to Confirm.**	
18.	**<u>Auxiliaries Equipment/Spares:</u>** As per Cl. No. 6.16 of Tender Specification, PY-51497, all auxiliary equipment [clause no 7.4.5.7.3 of TAC] & spares [7.4.5.11 of TAC] as per TAC are included in bidder's scope of supply. Deviation in this is not acceptable. **Bidder to Confirm.**	

19.	As per Cl. No. 6.17 of Tender Specification, PY-51497, All the special tools and tackles indicated in this clause are included in bidder's scope of supply. Deviation in this is not acceptable. **Bidder to Confirm.**	
20.	2 year recommended spares list is enclosed with bidder's offer whose optional price is indicated in Annexure-4B(Price Bid Format). **Bidder to Confirm.**	
21.	As per Cl. No. 8 of Tender Specification, PY-51497, bidder is meeting the Equipment Qualification Criteria. All the references shall be submitted along with the offer as per Annexure-8 Deviation in this is not acceptable. **Bidder to Confirm.**	
22.	Painting schedule shall be as per Cl. No. 10 of Tender Specification, PY-51497. **Bidder to Confirm.**	
23.	**Inspection, Testing requirements for Pump & Drive assembly:** Inspection, Testing requirements shall be as per BHEL QAP & specification requirement only. Bidder to note that QAP shall be as per Annexure-7 & the same shall be discussed during detail engg. However in case of practical difficulties in meeting the quality requirement, same shall be mutually discussed & agreed during detail engg. Stage. **Bidder to note & confirm**.	
24.	Make of all the items shall be as per Annexure-9(Sub-Vendor List). **Bidder to confirm.**	
25.	**Bidder to confirm** compliance with Annexure-10, Master Document List enclosed with Tender Specification, PY-51497 wrt list of documents, schedule of submission.	
26.	Bidders to comment on the instrumentation requirement as per P&ID (Annexure -1) based on their experience. If any other instruments are required as per good engg practice, bidder to highlight & Consider the same.	
27.	Bidder shall submit Annexure-11 indicating as ***NO DEVIATION*** along with their offer. Any specific deviations, which are impractical, shall be raised in form of pre-bid queries as per Annexure-12 before submission of Techno Commercial offer. Any deviation/ queries raised during technical bid submission shall not be entertained. **Bidder to Confirm.**	
28.	Bidder to quote as per Annexure-4B, Price Bid Format only. Price quoted as per the price bid format, clearly indicating all the applicable items are	

	quoted, and not applicable items are clearly highlighted. Un priced copy of the same is enclosed with bidder's offer. **Bidder to check and confirm.**	
29.	Bidder to quote individual price for each item mentioned in the seal priced bid. **Bidder to check and confirm**.	
30.	Refer Annexure-2A of Tender Specification, PY-51497. The casing material mentioned in sl no 35 shall cater to the Hydraulic test pressure of casing Kg/cm²(g) as mentioned in sl no 54..If Not, bidder to consider superior material of casing. **Bidder to confirm.**	
31.	Bidder to confirm that the following documents are submitted along with their offer to enable BHEL to evaluate the offer. a) Duly filled in Pump-Motor datasheet **(Annexure-2B)** b) Tentative GAD / P&ID for Pump with Motor & Engine**(Stamped Copy of Annexure-1)** c) Performance curves for pump d) Un-priced copy of price in attached BHEL price bid formats**(Annexure-4B)** indicating quoted/ not quoted against each row & column. e) Equipment qualification criteria / PTR / Reference Lists f) Checklist as per **(Annexure-5B)** g) Deviation list [Indicating as No Deviation] as per **(Annexure-11)**	
32.	All important documents such as unpriced price bid, reference list, pump performance curve, Pump & drive assembly GA drawings, CS drawings must necessarily to be furnished by bidder along with their offer for evaluation. **Bidder to once again check their offer before submission and confirm.**	
33.	**BoQ for Main Equipment:** Bill of Quantity for Fire Water Pumps is enclosed with this checklist. This is the minimum BOQ identified by purchaser. However any other item required for successful commissioning of the fire water pump and drive assembly shall be considered by the bidder. Bidder to check and fill their confirmation whether the BoQ indicated is considered in their offer.	
34.	**BoQ for Commissioning Spares:** Bill of Quantity for Commissioning spares is enclosed with this checklist. Bidder to Confirm and furnish the list of commissioning spares considered by the bidder.	
35.	**BoQ for Special Tools and Tackles:**	

	Bill of Quantity for special tools and tackles is enclosed with this checklist. Bidder to Confirm and furnish the list of special tools and tackles considered by the bidder.	

SIGNATURE:
NAME:

DESIGNATION:

COMPANY:

DATE:

ANNEXURE-5C to PY-51497

CHECKLIST FOR OFFER FOR BOOSTER PUMP WITH DRIVES (MOTOR/DIESEL ENGINE)

S.No.	Description	Bidder's Reply
1.	**Bidder to confirm** that Performance requirement, Design and construction of the offered Pump model shall be guided by the TAC/LPA recommendations.	
2.	**Bidder to confirm** that Performance requirement, Design and construction of the offered Motor shall be guided by the TAC/LPA recommendations.	
3.	**Bidder to confirm** that Performance requirement, Design and construction of the offered Diesel Engine shall be guided by the TAC/LPA recommendations.	
4.	**Refer Annexure-2C of Tender Specification:** Datasheet of Booster Pump-Motor & Engine Driven. Duly filled Annexure-2C is enclosed with bidder's offer as indicated in Pg 04 of 24 of Tender Specification, PY-51497. **Bidder to Confirm.** **Datasheets in other formats are strictly not accepted.**	
5.	**Refer Annexure-2C of Tender Specification:** As per S.No. 8, type of pump is Horizontal, Centrifugal type, End Suction and Back Pullout.. **Bidder to Confirm.**	
6.	As per Cl. No. 6 of Tender Specification, PY-51497 and all its annexures, Scope of supply as per this clause shall be in bidder's scope. **Bidder to Confirm.** **Further offer submitted by bidders shall not be reviewed w.r.t scope.**	
7.	Bidder to offer single stage, Horizontal Type, Side Suction and Side Discharge booster pump provided, the offered model meets Pre-Qualification Criteria. **Bidder to Confirm.**	
8.	**Cable Glands & Lugs:** As per Cl. No. 6.2.1 of Tender Specification, PY-51497, suitable power & control cable glands & lugs shall be included in bidder scope of supply. Deviation in this is not acceptable. **Bidder to Confirm.**	
9.	As per Cl. No. 6.2.1 of Tender Specification, PY-51497, all LT Motors shall be of IE-3 type in-line with IS-12615. Deviation in this is not acceptable. **Bidder to Confirm.**	
10.	As per Cl. No. 6.2.2.4 of Tender Specification, PY-51497, A suitable 1 phase 230 Volt fuel pump (portable) to be provided to fill up diesel oil from Diesel Drum received from supplier of Diesel. This pump should also have facility to be operated by hand, in case electricity fails. However, is same is not available in market then bidders can supply one hand pump & one motor drive pump [ex-proof] separately. Necessary tubing [5m length] from Diesel Engine pump to the fuel tank along with valve (If any) to be supplied by Bidder. Deviation in this is not acceptable. **Bidder to Confirm.**	

11.	As per Cl. No. 6.2.2.5 of Tender Specification, PY-51497, minimum instrumentations indicated is considered by bidder in their scope of supply. Deviation in this is not acceptable. **Bidder to Confirm.**	
12.	As per Cl. No. 6.2.2.6 of Tender Specification, PY-51497, 15 m of exhaust piping with silencer & insulation with 6 Nos. of bends are included in bidder's scope of supply. The exhaust piping shall consist of bends, hood, bird screen etc. Deviation in this is not acceptable. **Bidder to Confirm.**	
13.	**Diesel Engine Control Panel:** As per cl. No. 6.2.2.2 of Tender Specification, PY-51497, PLC based control panel is considered by bidder. Stand for this panel is in purchaser scope. Deviation in this is not acceptable. **Bidder to Confirm.**	
14.	**Diesel Engine Control Panel:** All spare contacts/terminals on relays, control switches, limit switches or similar devices , dupex RTDs & Duplex T/Cs shall be wired to accessible terminal blocks for future connections. **Bidder to confirm.**	
15.	**Diesel Engine Control Panel:** As per cl. No. 6.2.2.2 of Tender Specification, PY-51497, Local Control Panel shall have feature of initiating 6 kick starts[1 first time and 5 Repeat starts] on receipt of start command from Remote. Deviation in this is not acceptable. **Bidder to Confirm.**	
16.	As per cl. No. 6.11 of Tender Specification, PY-51497, Hydrant and Spray Pump shall be tested by test bed motor (HT Motor), whereas Jockey Pump and Booster Pumps shall be tested by Job Motor (LT Motor). **Bidder to Confirm.**	
17.	As per Annexure-4C(Price Bid Format), mandatory spares for motors are not applicable. **Bidder to Confirm.**	
18.	LT Motor shall be IE-3 energy efficient class as per IS-12615(Latest Version). **Bidder to Confirm.**	
19.	Starting current requirements for LT Motor for IE-3 energy efficient class shall be as per IS-12615(Latest Edition). **Bidder to Confirm.**	

20.	**<u>Battery & Battery Charger:</u>** As per Cl. No. 6.2.2.7 of Tender Specification, PY-51497, battery and battery charger is considered by bidder in their scope of supply. Deviation in this is not acceptable. **Bidder to Confirm.**	
21.	Bidder has considered 2 Nos of 12V Batteries for Booster Pumps. **Bidder to Confirm.**	
22.	Each set of Batteries for Diesel Engine(2 x 12V) shall be capable of starting the Engine for 12 times minimum with out recharging. **Bidder to confirm**	
23.	**<u>Coupling between pump and drives [Motor/Engine] :</u>** As per Cl. No. 6.3 of Tender Specification, PY-51497, Coupling between pump and drives, [Motor/Engine] shall be BHEL Tender Specification. Accordingly coupling mandatory spares to be considered as per BHEL Tender Specification. Deviation in this is not acceptable. **Bidder to Confirm.**	
24.	As per Cl. No. 6.6 of Tender Specification, PY-51497, that all the Suitable reducers/expanders & counter flanges along with gaskets & stud nuts at all the terminal points are considered by bidder. Deviation in this is not acceptable. **Bidder to Confirm.**	
25.	As per Cl. No. 6.14 of Tender Specification, PY-51497, All the list of commissioning spares indicated in this clause are included in bidder's scope of supply. Any commissioning spare required over and above the recommended commissioning spares during commissioning shall be supplied free of cost by the equipment vendor. Deviation in this is not acceptable. **Bidder to Confirm.**	
26.	**<u>Auxiliaries Equipment/Spares:</u>** As per Cl. No. 6.16 of Tender Specification, PY-51497, all auxiliary equipment [clause no 7.4.5.7.3 of TAC] & spares [7.4.5.11 of TAC] as per TAC are included in bidder's scope of supply. Deviation in this is not acceptable. **Bidder to Confirm.**	
27.	As per Cl. No. 6.17 of Tender Specification, PY-51497, All the special tools and tackles indicated in this clause are included in bidder's scope of supply. Deviation in this is not acceptable. **Bidder to Confirm.**	
28.	2 year recommended spares list is enclosed with bidder's offer whose optional price is indicated in Annexure-4C(Price Bid Format). **Bidder to Confirm.**	

29.	As per Cl. No. 8 of Tender Specification, PY-51497, bidder is meeting the Equipment Qualification Criteria. All the references shall be submitted along with the offer as per Annexure-8 Deviation in this is not acceptable. **Bidder to Confirm.**	
30.	Painting schedule shall be as per Cl. No. 10 of Tender Specification, PY-51497. **Bidder to Confirm.**	
31.	**Inspection, Testing requirements for Pump & Drive assembly:** Inspection, Testing requirements shall be as per BHEL QAP & specification requirement only. Bidder to note that QAP shall be as per Annexure-7 & the same shall be discussed during detail engg. However in case of practical difficulties in meeting the quality requirement, same shall be mutually discussed & agreed during detail engg. Stage. **Bidder to note & confirm**.	
32.	Make of all the items shall be as per Annexure-9(Sub-Vendor List). **Bidder to confirm.**	
33.	Make of diesel engine shall be as per approved vendor list only. Equivalent make is not acceptable. **Bidder to confirm.**	
34.	As per Annexure-12, Make of Battery charger shall be OEM standard. However, bidder to ensure the reputed make & shall have Proven Track record for the same. **Bidder to confirm.**	
35.	**Bidder to confirm** compliance with Annexure-10, Master Document List enclosed with Tender Specification, PY-51497 wrt list of documents, schedule of submission.	
36.	Bidders to comment on the instrumentation requirement as per P&ID (Annexure -1) based on their experience. If any other instruments are required as per good engg practice, bidder to highlight & Consider the same.	
37.	Bidder shall submit Annexure-11 indicating as ***NO DEVIATION*** along with their offer. Any specific deviations, which are impractical, shall be raised in form of pre-bid queries as per Annexure-12 before submission of Techno Commercial offer. Any deviation/ queries raised during technical bid submission shall not be entertained. **Bidder to Confirm.**	
38.	Bidder to quote as per Annexure-4C, Price Bid Format only. Price quoted as per the price bid format, clearly indicating all the applicable items are quoted, and not applicable items are clearly highlighted. Un priced copy of the same is enclosed with bidder's offer. **Bidder to check and confirm.**	
39.	Bidder to quote individual price for each item mentioned in the seal priced bid. **Bidder to check and confirm**.	
40.	Refer Annexure-2C of Tender Specification, PY-51497. The casing material mentioned in sl no 35 shall cater to the Hydraulic test pressure of casing Kg/cm²(g) as mentioned in sl no 54..If Not, bidder to consider superior material of casing. **Bidder to confirm.**	
41.	Bidder to confirm that the following documents are submitted along with their offer to enable	

	BHEL to evaluate the offer. a) Duly filled in Pump-Motor-Diesel Engine datasheet **(Annexure-2A)** b) Tentative GAD / P&ID for Pump with Motor & Engine**(Stamped Copy of Annexure-1)** c) Performance curves for pump d) Un-priced copy of price in attached BHEL price bid formats**(Annexure-4C)** indicating quoted/ not quoted against each row & column. e) Equipment qualification criteria / PTR / Reference Lists f) Checklist as per **(Annexure-5C)** g) Deviation list [Indicating as No Deviation] as per **(Annexure-11)**	
42.	All important documents such as unpriced price bid, reference list, pump performance curve, Pump & drive assembly GA drawings, CS drawings must necessarily to be furnished by bidder along with their offer for evaluation. **Bidder to once again check their offer before submission and confirm.**	
43.	**BoQ for Main Equipment:** Bill of Quantity for Fire Water Pumps is enclosed with this checklist. This is the minimum BOQ identified by purchaser. However any other item required for successful commissioning of the fire water pump and drive assembly shall be considered by the bidder. Bidder to check and fill their confirmation whether the BoQ indicated is considered in their offer.	
44.	**BoQ for Commissioning Spares:** Bill of Quantity for Commissioning spares is enclosed with this checklist. Bidder to Confirm and furnish the list of commissioning spares considered by the bidder.	
45.	**BoQ for Special Tools and Tackles:** Bill of Quantity for special tools and tackles is enclosed with this checklist. Bidder to Confirm and furnish the list of special tools and tackles considered by the bidder.	

SIGNATURE:
NAME:

DESIGNATION:

COMPANY:

DATE:

ANNEXURE-5D to PY-51497

CHECKLIST FOR OFFER FOR BOOSTER PUMP WITH DRIVES (DIESEL ENGINE)

S.No.	Description	Bidder's Reply
1.	**Bidder to confirm** that Performance requirement, Design and construction of the offered Pump model shall be guided by the TAC/LPA recommendations.	
2.	NIL.	
3.	**Bidder to confirm** that Performance requirement, Design and construction of the offered Diesel Engine shall be guided by the TAC/LPA recommendations.	
4.	**Refer Annexure-2D of Tender Specification:** Datasheet of Sea Water Inkate Pump – Diesel Engine Driven. Duly filled Annexure-2D is enclosed with bidder's offer as indicated in Pg 04 of 32 of Tender Specification, PY-51497. **Bidder to Confirm.** **Datasheets in other formats are strictly not accepted.**	
5.	**Refer Annexure-2D of Tender Specification:** As per S.No. 8, type of pump is Vertical, Centrifugal type. **Bidder to Confirm.**	
6.	As per Cl. No. 6 of Tender Specification, PY-51497 and all its annexures, Scope of supply as per this clause shall be in bidder's scope. **Bidder to Confirm.** **Further offer submitted by bidders shall not be reviewed w.r.t scope.**	
7.	**Cable Glands & Lugs:** As per Cl. No. 6.2.2.2 of Tender Specification, PY-51497, suitable power & control cable glands & lugs shall be included in bidder scope of supply. Deviation in this is not acceptable. **Bidder to Confirm.**	
8.	NIL.	
9.	As per Cl. No. 6.2.2.4 of Tender Specification, PY-51497, A suitable 1 phase 230 Volt fuel pump (portable) to be provided to fill up diesel oil from Diesel Drum received from supplier of Diesel. This pump should also have facility to be operated by hand, in case electricity fails. However, is same is not available in market then bidders can supply one hand pump & one motor drive pump [ex-proof] separately. Necessary tubing [5m length] from Diesel Engine pump to the fuel tank along with valve (If any) to be supplied by Bidder. Deviation in this is not acceptable. **Bidder to Confirm.**	

10.	As per Cl. No. 6.2.2.5 of Tender Specification, PY-51497, minimum instrumentations indicated is considered by bidder in their scope of supply. Deviation in this is not acceptable. **Bidder to Confirm.**	
11.	As per Cl. No. 6.2.2.6 of Tender Specification, PY-51497, 15 m of exhaust piping with silencer & insulation with 6 Nos. of bends are included in bidder's scope of supply. The exhaust piping shall consist of bends, hood, bird screen etc. Deviation in this is not acceptable. **Bidder to Confirm.**	
12.	**Diesel Engine Control Panel:** As per cl. No. 6.2.2.2 of Tender Specification, PY-51497, PLC based control panel is considered by bidder. Stand for this panel is in purchaser scope. Deviation in this is not acceptable. **Bidder to Confirm.**	
13.	**Diesel Engine Control Panel:** All spare contacts/terminals on relays, control switches, limit switches or similar devices , dupex RTDs & Duplex T/Cs shall be wired to accessible terminal blocks for future connections. **Bidder to confirm.**	
14.	**Diesel Engine Control Panel:** As per cl. No. 6.2.2.2 of Tender Specification, PY-51497, Local Control Panel shall have feature of initiating 6 kick starts[1 first time and 5 Repeat starts] on receipt of start command from Remote. Deviation in this is not acceptable. **Bidder to Confirm.**	
15.	Nil	
16.	Nil.	
17.	**Battery & Battery Charger:** As per Cl. No. 6.2.2.7 of Tender Specification, PY-51497, battery and battery charger is considered by bidder in their scope of supply. Deviation in this is not acceptable. **Bidder to Confirm.**	
18.	Bidder has considered 2 Nos of 12V Batteries for Sea Water Intake Pumps. **Bidder to Confirm.**	
19.	Each set of Batteries for Diesel Engine(2 x 12V) shall be capable of starting the Engine for 12 times minimum with out recharging. **Bidder to confirm**	

20.	**<u>Coupling between pump and drives [Engine] :</u>** As per Cl. No. 6.3 of Tender Specification, PY-51497, Coupling between pump and drives, [Engine] shall be BHEL Tender Specification. Accordingly coupling mandatory spares to be considered as per BHEL Tender Specification. Deviation in this is not acceptable. **Bidder to Confirm.**	
21.	**<u>Gear Box between pump and drives [Engine]</u> :** As per Cl. No. 6.4 of Tender Specification, PY-51497, Gear Box between pump and drives, [Engine] shall be BHEL Tender Specification. Deviation in this is not acceptable. **Bidder to Confirm.**	
22.	As per Cl. No. 6.6 of Tender Specification, PY-51497, that all the Suitable reducers/expanders & counter flanges along with gaskets & stud nuts at all the terminal points are considered by bidder. Deviation in this is not acceptable. **Bidder to Confirm.**	
23.	As per Cl. No. 6.14 of Tender Specification, PY-51497, All the list of commissioning spares indicated in this clause are included in bidder's scope of supply. Any commissioning spare required over and above the recommended commissioning spares during commissioning shall be supplied free of cost by the equipment vendor. Deviation in this is not acceptable. **Bidder to Confirm.**	
24.	**<u>Auxiliaries Equipment/Spares:</u>** As per Cl. No. 6.17 of Tender Specification, PY-51497, all auxiliary equipment [clause no 7.4.5.7.3 of TAC] & spares [7.4.5.11 of TAC] as per TAC are included in bidder's scope of supply. Deviation in this is not acceptable. **Bidder to Confirm.**	
25.	As per Cl. No. 6.18 of Tender Specification, PY-51497, All the special tools and tackles indicated in this clause are included in bidder's scope of supply. Deviation in this is not acceptable. **Bidder to Confirm.**	
26.	2 year recommended spares list is enclosed with bidder's offer whose optional price is indicated in Annexure-4D(Price Bid Format). **Bidder to Confirm.**	

27.	As per Cl. No. 8 of Tender Specification, PY-51497, bidder is meeting the Equipment Qualification Criteria. All the references shall be submitted along with the offer as per Annexure-8 Deviation in this is not acceptable. **Bidder to Confirm.**	
28.	Painting schedule shall be as per Cl. No. 10 of Tender Specification, PY-51497. **Bidder to Confirm.**	
29.	**<u>Inspection, Testing requirements for Pump & Drive assembly:</u>** Inspection, Testing requirements shall be as per BHEL QAP & specification requirement only. Bidder to note that QAP shall be as per Annexure-7 & the same shall be discussed during detail engg. However in case of practical difficulties in meeting the quality requirement, same shall be mutually discussed & agreed during detail engg. Stage. **Bidder to note & confirm**.	
30.	Make of all the items shall be as per Annexure-9(Sub-Vendor List). **Bidder to confirm.**	
31.	Make of diesel engine shall be as per approved vendor list only. Equivalent make is not acceptable. **Bidder to confirm.**	
32.	As per Annexure-12, Make of Battery charger shall be OEM standard. However, bidder to ensure the reputed make & shall have Proven Track record for the same. **Bidder to confirm.**	
33.	**Bidder to confirm** compliance with Annexure-10, Master Document List enclosed with Tender Specification, PY-51497 wrt list of documents, schedule of submission.	
34.	Bidders to comment on the instrumentation requirement as per P&ID (Annexure -1) based on their experience. If any other instruments are required as per good engg practice, bidder to highlight & Consider the same.	
35.	Bidder shall submit Annexure-11 indicating as ***<u>NO DEVIATION</u>*** along with their offer. Any specific deviations, which are impractical, shall be raised in form of pre-bid queries as per Annexure-12 before submission of Techno Commercial offer. Any deviation/ queries raised during technical bid submission shall not be entertained. **Bidder to Confirm.**	
36.	Bidder to quote as per Annexure-4C, Price Bid Format only. Price quoted as per the price bid format, clearly indicating all the applicable items are quoted, and not applicable items are clearly highlighted. Un priced copy of the same is enclosed with bidder's offer. **Bidder to check and confirm.**	
37.	Bidder to quote individual price for each item mentioned in the seal priced bid. **Bidder to check and confirm**.	
38.	Bidder to confirm that the following documents are submitted along with their offer to enable BHEL to evaluate the offer. a) Duly filled in Pump-Motor-Diesel Engine datasheet **(Annexure-2D)** b) Tentative GAD / P&ID for Pump with Motor & Engine**(Stamped Copy of Annexure-1)**	

	c) Performance curves for pump d) Un-priced copy of price in attached BHEL price bid formats**(Annexure-4D)** indicating quoted/ not quoted against each row & column. e) Equipment qualification criteria / PTR / Reference Lists f) Checklist as per **(Annexure-5D)** g) Deviation list [Indicating as No Deviation] as per **(Annexure-11)**	
39.	All important documents such as unpriced price bid, reference list, pump performance curve, Pump & drive assembly GA drawings, CS drawings must necessarily to be furnished by bidder along with their offer for evaluation. **Bidder to once again check their offer before submission and confirm.**	
40.	**BoQ for Main Equipment:** Bill of Quantity for Fire Water Pumps is enclosed with this checklist. This is the minimum BOQ identified by purchaser. However any other item required for successful commissioning of the fire water pump and drive assembly shall be considered by the bidder. Bidder to check and fill their confirmation whether the BoQ indicated is considered in their offer.	
41.	**BoQ for Commissioning Spares:** Bill of Quantity for Commissioning spares is enclosed with this checklist. Bidder to Confirm and furnish the list of commissioning spares considered by the bidder.	
42.	**BoQ for Special Tools and Tackles:** Bill of Quantity for special tools and tackles is enclosed with this checklist. Bidder to Confirm and furnish the list of special tools and tackles considered by the bidder.	

SIGNATURE:

NAME:

DESIGNATION:

COMPANY:

DATE:

VOLUME II

SUB-SECTION 2.25

CLEANING, PROTECTIVE COATING AND PAINTING

1.0.0 GENERAL

This specification covers the general requirements related to the cleaning protective coating and painting of equipment, components and systems that are covered under main equipment / system specifications for 2x660 MW Supercritical Thermal Power Plant. The components and/or equipment shall be mechanically and /or chemically cleaned during the following stages of the Contract.

- Cleaning in workshop
- Cleaning before painting and/or corrosion protection (application of prime coat)
- Cleaning before erection and during installation.

Cleaning of fabricated component items shall be carried out after fabrication and final heat treatment or welding at manufacturer's works or at site, as appropriate. No paint shall be applied surfaces within 75 mm of field welded connections. These surfaces shall be coated with a consumable preservative and marked.

For cleaning in workshop and before painting, mechanical cleaning by power tool and scrapping with steel wire brushes shall be adopted to clear the surfaces. However, in certain locations where power tool cleaning cannot be carried out, hand scrapping may be permitted with steel wire brushes and/or abrasive paper. Cleaning with solvents shall be resorted to only in such areas where other methods specified above have not achieved the desired results. Cleaning with solvents shall be adopted only after written approval of the Owner / Engineer.

Machined surfaces shall be protected during the cleaning operations.

In the event of the surfaces not being cleaned to the Owner's satisfaction, such parts of the cleaning procedures or agreed alternatives as are deemed necessary to overcome the deficiencies shall be carried out at the supplier's sole expense.

For reclining small areas, hand cleaning by wire brushing may be permitted.

2.0.0 CODES AND STANDARDS

Painting of equipment shall be carried out as per the Codes indicated below and shall conform to the relevant IS Code for the material and workmanship.

The following codes and standards shall be followed for the surface preparation, surface protection and painting works.

IS: 5	Colors for ready mixed paints and enamels.
IS: 101	Methods of test for ready mixed paints and enamels.
IS: 104	Ready mixed paint, brushing, Zinc Chrome, priming.
IS: 158	Ready mixed paint, brushing, bituminous, black, lead free, acid, alkali, water and heat resisting.
IS: 161	Heat resistant paints
IS: 1303	Glossary of terms relating to paints.
IS: 1477	Code of practice for painting of ferrous metals in buildings (Parts I & II).
IS: 2074	Specifications for ready mixed paint, Air drying, red oxide zinc chrome priming.
IS: 2338	Code of practice for finishing of wood and wood based materials: Parts 2 schedules.

IS: 2339	Aluminum paint for general purposes, in dual container.
IS: 2395	Code of practice for painting of concrete, masonry and plaster surfaces: Part 2 schedules.
IS: 2524	Code of practice for painting of non-ferrous metals in buildings (Parts I & II).
IS: 2932	Specification for enamel, synthetic, exterior (a) undercoating, (b) Finishing
IS: 3140	Code of practice for painting asbestos cement building products.
IS: 6158	Recommended practice for design safeguarding against Embrittlement of hot dip Galvanized Iron & steel products.
IS: 6159	Recommended practice for design & fabrication of Iron &steel products prior to Galvanizing & metal spraying.
IS: 6278	Code of practice for white washing and Color - Washing.
IS: 10221	Code of practice for coating & wrapping of underground mild steel pipelines.
IS: 33	Inorganic pigments and extenders for paints –Methods of sampling & test.
IS: 13183	Aluminum paint, Heat resistant - specifications.
IS: 144	Specification for ready mixed paint brushing, petrol resisting, Air drying for Interior paints of tanks and containers, Red oxide.
IS: 9954	Pictorial surface preparation standards for painting of steel surfaces.
IS: 11883	Specification for Ready Mixed Paint, Air Drying, Red Oxide Priming for metals.
IS: 9404	Color code for identification of pipelines used in the Thermal Power Plants.
IS: 12744	Specification for Ready Mixed Paint, Air Drying, Red Oxide-Zinc Phosphate Priming.
BS: 2015	Glossary of paint selected terms.
BS: 5252	Final coat color.
BS: 7079A1/S1	Specification for rust grades and preparation grades of uncoated substrates after overall removal of previous coating.
BS: 7079A2	Preparations grades of previously coated steel substrates.
BS: 7079GrC	Surface roughness characteristics of blast cleaned steel substrates.
BS: 7079GrD	Methods for surface preparation.
BS-4232	Surface Finish of Blast cleaned steel for painting.
ASTM	American Standard for Testing Material.
ASTM A 780	Standard practice for repair of damaged galvanized coatings.
AWWA	American Water Works Association.
ASA-A-13.1-1981	Scheme for identification of piping system (American National Standard Institution).
DIN	Deutsehes Institute for Normung
S1S-055900-1967	Surface preparation standards for painting steel surfaces. (Swedish standard Institution)
SSPC-SP	Preparation Specifications (Steel structures painting council, U.S.A.).
	National Association of Corrosion Engineers, U.S.A. (NACE).

3.0.0 SCOPE OF WORK AND GENERAL REQUIREMENTS

This specification covers the surface preparation, method of application and material to be used for all coating of equipment, steel structures and piping. Steel material subjected to surface preparation on shop/site shall have minimum requirements in accordance with Rust Grade B (SSPC/SSPM Volume-2).

Coating materials according to SSPC, EN ISO, ASTM, BIS or DIN standards, shall be used. The paint shall comply with applicable laws, regulations, ordinances etc., of the local authority, state or the nation pertains to the work. The materials shall be matched with each other so that they are compatible. Coatings deviating this specification shall be subject to approval.

Standards of surface preparation and painting shall give a time to first maintenance of minimum 10 years.

The paint to be applied shall be approved by Owner.

All paints & paint material used shall be procured from approved manufacturers. Paint shall be supplied in manufacturers original containers with the description of content, specification No., colour, ref no, date of manufacture, shelf life expiry date & pot life.

The paint manufacturers shall provide coating system data sheet for each coating system to be used containing the following information

a. Surface preparations
b. Film thickness (min and max)
c. Min and max recoating intervals at relevant temperatures
d. Mixing ratio, thinner details and coating repair systems

The sample for testing the paint being used may be taken by the Owner at any time.

In general Shop fabricated equipment will be delivered to the site coated with a shop applied system or the manufacturer's standard finish in accordance with the requirements of this specification.

For equipment that has received shop prime coat, all touch-up prime coat and additional coats shall be applied in accordance with the coating schedule. It is responsibility of the vendor to ensure compatibility between shop and field applied paint systems.

Necessary precautions shall be provided to all equipment, structures to protect other surfaces from abrasive blasting, coating over spray and spatter. Damage to other surfaces or equipment shall be repaired by the vendor.

The Contractor shall submit the following for review and approval by the Owner:

a. Manufacturer's recommended paint scheme for the project
b. Latest published product & instructions for application data,
c. Procedures for surface preparation and application.
d. Pre qualification for equipments and blasting materials, product, procedure and personnel qualifications for the paint and painting systems.
e. Painting repair procedures

Painting records shall contain:

- Equipment/components/location painted
- Date of painting
- Paint details such as specification No, colour, date of manufacture, shelf life, expiry date
- Application equipments

- Ambient conditions at the time of painting
- Surface temperature
- Drying time between coating, DFT and number of coatings
- Appropriate work plan for painting.

The supply of all necessary equipments, weather protection, and scaffolding for painting to ensure work is carried out in accordance with the specification and agreed programme.

Maintenance of the paint work until completion of the contract, this shall include repair of any damaged areas caused by third party.

Disposal of painting waste resulting from painting, shall comply with applicable laws, regulations, ordinances etc., of the local authority, state or the nation pertains to the work and coating materials.

It is a mandatory requirement that all operatives working to this procedure take full cognizance and implement necessary safety precautions.

4.0.0 CLEANING AT MANUFACTURER'S WORKS

Mechanical cleaning shall preferably be carried out by abrasive blasting. The Owner is prepared to consider alternative methods such as chemical cleaning provided they achieve the necessary surface condition.

In case of chemical cleaning, the detailed procedure for chemical cleaning as well as the system for which chemical cleaning is required shall be submitted by the contractor for Owner's approval. The procedure shall comprise of pre-treatment and acid treatment to achieve cleanliness equivalent to that specified for mechanical cleaning.

Surface condition:

The Metal surfaces shall be clean and free of mil scale, rust, dirt, grease and any other deleterious matter.

Where metal surfaces are to be painted the surface profiles shall conform to the painting specification requirements.

Where this does not apply, surfaces shall have a surface texture not coarser than Grade 80 abrasive paper.

Abrasives:

Abrasives containing silica, silicates or slag residues shall not be used for water/steam side surfaces of plant except for cleaning sand castings, where hydro blasting may be employed.

For austenitic materials only, abrasives containing 98% or more of alumina, $Al_2 O_3$, shall be used.

Removal of abrasive and debris:

After cleaning, abrasive and debris shall be thoroughly removed for components.

5.0.0 PROTECTION AT MANUFACTURER'S WORKS

As soon as all items have been cleaned and within four hours of the subsequent drying, they shall be given suitable anti-corrosion protection.

All water, air and steam side surfaces shall be protected by the application of approved water soluble corrosion inhibitors, or vapor phase inhibitors that can be subsequently removed by site water washing or steam blowing.

The gas side of steam generating plant items shall be protected by the application of temporary protective that do not require to be removed before commissioning, but which are removed during initial firing.

The rate of application of volatile corrosion inhibitors shall be at least 10 grams per square meter or 35 grams per cubic metre, whichever is the greater, except for pipes up to 300 mm diameter for which the minimum application rates shall be 5 grams per square metre.

Immediately after the protective treatment has been applied all vessels and pipes shall be suitably sealed off by discs or caps or approved alternatives to prevent ingress from the surroundings. Cylindrical plugs shall not be driven into the ends of pipes. These protective covers shall not be removed until immediately before final connection is made to the associated equipment.

6.0.0 WEATHER CONDITIONS

Painting shall be done only when the surface temperature is above 5℃. Surface temperature must be at least 3℃ above dew point to ensure that condensation does not occur on the surface.

Reasonable protection against precipitation and seawater spray shall be exercised for the painting of outdoor parts.

Precautions shall also be taken against solar radiation to ensure that the specified dry film thickness of priming or finish coats is obtained.

Any prime coat exposed to excess humidity, rain, dust etc., before drying, shall be permitted to dry and the damaged area of primer shall be removed and the surface prepared and primed again.

Sheltered or unventilated horizontal surfaces on which dew may collect require more protection, and to achieve this additional top coat of paint shall be applied.

The temperature quoted as “normal” in the “Paint System Tables” refers to the average local climatic conditions.

7.0.0 SURFACE PREPARATION

In preparing any surface to be coated, all loose paint, dirt, grease, rust, scale, weld slag or spatter or any other extraneous material shall be removed and defects repaired, so as to obtain a clean, dry, even surface to receive the priming or finishing coat (s) as called for in the painting schedules. Sharp edges should be rounded, especially when tank linings have to be applied.

All machined surfaces, including flange faces, shall be suitably covered to prevent damage during surface preparation.

All surfaces should be blast cleaned whenever possible.

Surface preparation methods:

Bare steel surfaces should be prepared by one of the methods described below in order of preference and in accordance with Swedish Standard SIS 05 59 00 or Steel Structures Painting Council, SSPC, Vis 1, or DIN 55928, section 4.

The relative humidity level should not be more than 60% & the steel surface temperature at least 3º C above the dew point during dry blast cleaning operations.

a. White metal blast cleaning Sa 3 or SSPC - SP 5

Sa 3 Blast cleaning to bare metal. Mill scale, rust and foreign matter must be removed completely. Subsequently, the surface is cleaned with vacuum cleaner, clean dry compressed air or a clean brush. It must then have a uniform metallic color and correspond in appearance to the prints designated Sa 3.

b. Near white metal blast cleaning Sa 2 1/2 or SSPC - SP 10

Sa 2 1/2. very thorough blast cleaning. Mill scale, rust and foreign matter shall be removed to the extent that the only traces remaining are slight imperfections in the form of spots or stripes. Subsequently, the surface is cleaned with a vacuum cleaner, clean dry compressed air or a clean brush. It must then correspond in appearance to the prints designated Sa 2 1/2.

Mechanical cleaning should only be used when procedures (a) and (b) are not practicable.

c. Near white metal blast cleaning P Sa 2 1/2 DIN 55928

Very thorough blast cleaning. Very adhesive coatings remain. From all other surface mill scale and rust are to be removed to such an extent that the only traces remaining are slight imperfections in the form of spots or stripes. Further treatments see Sub b).

The adhesivity of residual coatings in the transition zone has to be tested even after the application of the primer.

d. Very thorough mechanical scraping and wire brushing St 3

St 3 very thorough scraping and wire-brushing - machine brushing - grinding - etc. are to be preferred. Surface preparation as for St 2. But much more thoroughly. After the removal of dust, the surface must have a pronounced metallic sheen and correspond to the prints designated St. 3.

e. Thorough scraping and wire brushing St 2

St 2 Thorough scraping and wire-brushing - machine brushing - grinding - etc. The treatment shall remove loose mill scale, rust and foreign matter. Subsequently, the surface is cleaned with a vacuum cleaner, clean dry compressed air or a clean brush. It should then have a faint metallic sheen. The appearance must correspond to the prints designated St 2.

f. Air Blasting with Non-Metallic Abrasives Powder

Whenever the "Duplex"-process is to be applied (hot dip galvanising followed by painting), prepare the hot dip galvanised surface by water washing to remove flux residues and careful air blasting with non-metallic abrasive powder. Use an abrasive with grain size from 0.1 to 0.5 mm, at a greatly reduced air pressure, max. 2 bar (g) (28 psig).

This procedure also applies to stainless steel and aluminium surfaces to be coated.

Surface preparation methods	SIS 055900	DIN 55928 Part-4	BS 4232 only for blasting	SSPC-Vis
Blasting acc to item (a),(b),(c),	Sa 3		First quality	White metal SP 5
Blasting acc to item (b)	Sa 2 1/2		Second quality	near White SP 10
Blasting acc to item (c)	Sa 2		Third quality	Commercial blast SP 6
Hand/or power tool derusting acc to item (e)	St 2		--	Hand tool cleaning SP 2
acc to items (d) and (e)	St 3		--	Power tool cleaning SP 3
Flame jet cleaning		F1	--	Flame cleaning SP 4
Pickling		Be	--	Pickling

Steel structures to be blast cleaned have to be free of pitting and other severely corroded places in accordance with B.S. 4232 and SIS 055900.

The abrasives used for blast-cleaning shall be graded flint, grit, shot or silica sand and shall be such that they will produce an average keying profile on the blast-cleaned surface of not more than 40 microns.

An air pressure of 7 bar g at the nozzle shall be used.

After blast-cleaning, all accumulated grit, dust, etc., must be removed leaving the surface clean, dry and free of mill scale, rust grease and other foreign matter.

In the event of rusting after completion of the surface preparation, the surface must be cleaned again in the manner specified.

Oil, grease, soil, cement, salts, acids or other corrosive chemicals shall be cleaned from steel surfaces, by the use of solvents, emulsions or cleaning compounds. The final wiping shall be with clean solvent and clean rags or brushes. There shall be no detrimental residue left on the surface.

Primed areas which suffer damage must be spot blasted on site to a degree of cleanliness Sa 2 1/2 before, touching up.

Protective coating must be applied as quickly as possible after the completion of surface preparation no matter what cleaning method has been used.

No blast-cleaned surface shall be allowed to remain uncoated overnight.

Steel work protected by shop primer after arrival on site must be cleaned of salt, sand, oil etc. Before the first coat of paint is applied on site. Shop primer damaged during transport must be rectified by blast-cleaning and coating before application of the site coats.

Wood surfaces shall be sanded clean. All nail holes shall be puttied and sanded before priming.

Concrete: If a protective coating is required, concrete shall be allowed to cure before painting.

8.0.0 PREPARATION OF COATING MATERIALS

All containers shall remain un-opened until required for use.

Primers and paints which have livered, gelled or otherwise deteriorated shall not be used.

The oldest primer or paint of each kind shall be used first.

All ingredients in any container shall be thoroughly mixed before use, and shall be agitated frequently during application to keep the primer in suspension.

Primer or paint mixed in the original container shall not be transferred until all settled pigment is incorporated into the body of liquid.

Mixing in open containers shall be done in a well ventilated area.

Primer or paint shall be mixed in a manner ensuring the breakdown of all lumps, complete dispersion of pigment and uniform composition.

Two-component primers shall be mixed in accordance with the manufacturer's instructions.
Thinners shall not be added to primers or paints unless necessary for proper application according to the manufacturer's instructions.
When use of thinners is permitted, it must be added to the primer or paint during mixing.

8.1.0 Primer Paint

After the surface is prepared, one coat of suitable primer shall be applied. After this first coat is dried up completely, second coat of primer shall be applied.

Primer shall be applied by brushing to ensure a continuous film without 'holidays'. The dry film thickness of each coat shall be as specified in the Annex- ANNEX 25.1.2 -Paint System of this specification.

The primer should be worked by brush application to cover the crevices, corners, sharp edges etc. in the presence of inspector.

The shades of successive coats should be slightly different in color in order to ensure application of individual coats, the thickness of each coat and complete coverage should be checked as per specification approved by Engineer before application of successive coats.

The contractor shall provide standard thickness measurement instrument with appropriate range(s) for measuring.

Elko meter for measuring the Dry film thickness of each coat, surface profile gauge for checking of surface profile in case of sand blasting. Holiday detectors and pinhole detectors for checking the painted surface discontinuities should be provided by the contractor.

The contractor shall make arrangements for paint manufacturer to provide expert technical service at site as and when required free of cost and without any obligation to the Owner, as it would be in the interest of the manufacturer to ensure that both surface preparation and application are carried out as per their recommendations.

Final inspection shall include measurement of paint dry film thickness, check of finish and workmanship.

8.2.0 Rub down and Touch Up of Primer

The shop coated surfaces shall be rubbed down thoroughly with emery paper to remove all dust, rust and other foreign matters, washed, degreased, then cleaned with warm fresh water and air dried.

The portions, from where the shop coat has peeled off, shall be touched up and allowed to dry before applying a coat of primer.

The compatibility between shop coat and field primer shall be ascertained from the paint manufacturer. In case degreasing with white spirit is not effective, the surface shall be finally wiped clean with aromatic solvent like xylol or light naphtha.

8.3.0 Non Compatible Shop Coat Primer

a) The compatibility of finishing coat shall be confirmed from the paint manufacturer. In the event of use of primer such as zinc rich epoxy, inorganic zinc silicate etc., the paint system shall depend on condition of shop coat. If the shop coat is in satisfactory condition showing no major defect, the shop coat shall not be removed. The touch up primer and finishing coat(s) shall be identified for application by Engineer. Shop coated (coated with primer & finishing coat) equipment shall not be repainted unless paint is damaged.

b) Shop primed equipment and surfaces shall only be 'spot cleaned' in damaged areas by means of power tool brush cleaning or hand tool cleaning and then spot primed before applying one coat of field primer unless otherwise specified. If shop primer is not compatible with field primer then shop coated primer shall be completely removed before application of selected paint system for particular environment. For package units/equipment, shop primer shall be as per the paint system given for particular environment.

c) In case of existing paint, compatibility between finishing coat and new selected finish coat shall be ascertained before application of finish coat. In case, the coat is selected for upgrading existing alkyd coating to high performance coating then, surface preparation shall be by manual/mechanical means to remove loose rust, peeled off/damaged paint, but sound old coating need not be removed. It shall be touched with suitable primer wherever it has peeled of before application of tie coat. The tie coat shall be applied after 7 days of curing of the primer. If, new paint system is not suitable to upgrade existing coating then complete paint shall be removed by mechanical or blast cleaning before application of new coating system.

8.4.0 Finish Paint

Suitable Finish paints as per the schedule shall be applied for the jobs. The color/shade shall be as approved by the Owner. After cleaning the dust on the dried up primer, first coat of finished paint shall be applied. After this first coat dries up hard, the surface is wet scrubbed cutting down to a smooth finish and ensuring that at no place the first coat is completely removed. After applying second coat, allowing the water to get evaporated completely, third finish coat of finish paint may be applied(if applicable).

9.0.0 STEEL STRUCTURES PAINTING

Generally, all steel structures shall receive two primer coats and two finish coats of painting. First coat of primer shall be given in shop after fabrication before dispatch to erection site after surface preparation as described below. The second coat of primer shall be applied (if required) after erection and final alignment of the erected structures. Two finish coats shall also be applied after erection.

Steel surface which is to painted shall be cleaned off dust and grease and the heavier layers of rust shall be removed by chipping to grade ST-2 as per SIS05-5900 or as per IS: 1477 (part -I) prior to actual surface preparation. Suitable primer of required DFT shall be applied as specified in the Paint system of this document- Annex-25.1.1.

Suitable finish paint of required DFT shall be applied as specified in the Paint system of this document- Annex-25.1.1. The undercoat and finish coat shall be of different tint to distinguish

the same from finish paint. All paints shall be of approved brand and shade as per the Owner's requirement.

Joints to be site welded shall have no paint applied within 100 mm of welding zone. Similarly where Friction grip fasteners are to be used no painting shall be provided. On completion of the joint the surfaces shall receive the paint as specified.

Surfaces inaccessible after assembly shall receive two coats of primer prior to assembly. Surfaces inaccessible after erection including top surfaces of floor beams supporting gratings or chequered plate shall receive one additional coat of finish paint over and above number of coats specified before erection. Portion of steel member embedded / to be encased in concrete shall not be painted.

10.0.0 PAINT MATERIALS

The paints shall conform to the specifications given in this Annex and class - 1 quality in the products range of any of the following manufacturers:

a. Asian Paints (India) Ltd.
b. Bombay Paints
c. Berger Paints India Ltd.,
d. Good lass Nerolac Paints Ltd.,
e. Garware Paints
f. Jenson & Nicholson
g. Shalimar Paints
h. Equivalent other country manufacturer after prior approval of Owner.

11.0.0 STORAGE

All paints and painting material shall be stored only in rooms to Engineer's approval. All necessary precautions shall be taken to prevent fire. The storage building shall preferably be separated from adjacent buildings. A signboard bearing the words "PAINT STORAGE - NO NAKED LIGHT - HIGHLY INFLAMMABLE - DANGER - NO SMOKING" shall be clearly displayed outside. All paints shall be stored in the safest manner so that no container rolls down and causes accidents. The shelf life of the paints shall be ensured so that the paint materials are not in storage and use after the date of expiry.

12.0.0 APPLICATION

Health and safety of work

The supplier has to check all painting work to be carried out according to the specification of the paint supplier further to all relevant prescriptions and regulations concerning the health and safety of work.

The paint supplier has to present a written specification including at least the flash point of the paints, ventilation requirements, handling precautions such as inhalation, eye and skin protection, and first aid procedure, storage requirements, spill or leak procedure, fire precaution, waste disposal.

Methods

Quality of the surface to be painted or coated has to be tested acc. to DIN 55928 and DIN 8202.

Temporary corrosion protections are to be completely removed prior to applying the definite one, in acc. with DIN 55928.

All prime coatings shall be applied by brush or airless spray or a combination of these methods, as approved by the coating manufacturer.

All doors, windows, stairways, handrails (if painted), bolts, flanges and equipment supports shall be finish painted by brush.
Spray guns should not be used outside in windy weather or near surfaces of a contrasting colour unless the latter is properly protected.

All cold-spray painting shall be done using standard equipment in accordance with accepted standards and methods.

Care has to be taken not to connect spraying devices for nitro and backelite paints simultaneously to oil based paints.

Paint applied to items that are not being painted shall be removed at the supplier's expense, leaving the surface clean, unstained and undamaged.

Dry film thickness (DFT)

To the maximum extent practicable the coats shall be applied as a continuous film of uniform thickness and free of pores. Overspray, skips, runs, sags and drips should be avoided. The different coats shall not be of the same colour.

For a composite paint or coating system consisting of several coats, the total DFT must be at least equal to the sum of the minimal DFT's for the individual coats. If, the paint system does not have the required minimum DFT those areas should be marked & repainted. If the occurrence of those areas is high, the complete surface must be repainted. It is also critically important to check the DFT of primers and intermediate coats and to correct them where necessary.

For paintings based on Zinc silicate the DFT is limited as well on minimum DFT as on maximum (150µm) because of the risk of mud cracking.

Consumption of paints

Has to be evaluated according to DIN 53220. The paints shall be tested as per
IS - 101.

Each coat of paint shall be allowed to harden before the next is applied. For epoxy paint the hardening time normally is 12-14 hours. Suppliers' recommendations regarding hardening time of epoxy paints must be followed.

Particular attention must be paid to full film thickness at edges.

The minimum total dry film thickness of the paint systems shall be as recommended in the **Annex 25.1.2**. The DFT is given in microns (millionths of a metre).

13.0.0 PROTECTIVE COATINGS AND PAINT SYSTEMS

The colour coding for identification of pipelines should comply with IS-2379 & IS -9404.

The type and number of protective coats for any item requiring painting are to be in accordance with DIN 55928 and are to be at least of a quality as shown in the attached Annex-25.1.1- Paint System.

Alternative to the Annex-25.1.1- Paint System specified, are to be presented on the schedule Departure from Specification, as indicated elsewhere.

Generally, all parts shall receive the specified prime coat (s) at the supplier's works to ensure that no corrosion occurs during transport to the site and storage at the site.

Parts which cannot be damaged during transport shall receive the full number of coats.

Types of Substrate, Base metal:

- Ferrous (Surface Temperature during operation < 120º C, EN ISO 12944:1998)

  To this group belongs carbon steel, low alloyed steel & high alloyed steel. All paint systems are inevitable for corrosion protection.

- Hot dip galvanized surfaces.

  Hot dip galvanized surfaces do require painting in a wet, industrial, chemicals and/or marine environment

- SS (EN ISO 12944:1998 conditionally applicable)

  In general, SS surfaces do not require painting unless in a chemical and/or marine environment. In case of chemical and/or marine environments determination of whether or not the surface requires painting depends on the chemical content of the base metal.

  The following formula applies:
  W = Cr + 3.3 x Mo + 22.45 N2

  If W < 23, then the surface has to be painted.

  If W < 28 & W > 23, then the surface to be painted if splash contact with the media (i.e. sea) is possible. This may also occur if there is a strong wind carrying drops to the surface.
  If W > 28, then the surface need not be painted.

- Aluminium

  By default such surfaces/components will not be painted. Exceptions are architectural/aesthetic reasons and high corrosive conditions, which shall be evaluated separately depending on aluminum alloys.

14.0.0 GALVANIZING

Galvanizing works shall conform in all respect to B.S. 729, B.S. 3083 and B.S.C.P. 2008 and to DIN 50976 whatever requires the higher quality and shall be performed by the hot dip process, unless otherwise specified.

It is essential that details of steel members and assemblies which are to be hot-dip galvanized should be designed in accordance with B.S 4479.

Vent-holes and drain-holes should be provided to avoid high internal pressures and air-locks during immersion, which may cause explosions, and to ensure that molten zinc is not retained in pockets during withdrawal.

Careful cleaning of welds is necessary before welded assemblies are dipped. The welds and the surrounding metal should be cleaned separately, preferably be blast-cleaning, because the usual preliminary pickling cannot be relied on to remove the welding slag.

All defects of the steel surface including cracks, surface laminations, laps and folds shall be removed in accordance with B.S. 4360. All drilling, cutting, welding, forming and final

fabrication of unit members and assemblies shall be completed, where feasible, before the structures are galvanized. The surface of the steelwork to be galvanized shall be free from paint, oil, grease and similar contaminants in accordance with DIN 55928, part 4 and DIN 50976. The weight of zinc coating per unit area has to be noted in the manufacturing documents in accordance with DIN 50976.

The minimum average coating weight shall be as specified in Table 1 of B.S. 729 or Table 2, DIN 50976, whatever requires higher quality.

Structural steel items shall be initially grit-blasted to B.S. 4232, second quality,
(Sa 21/2) or by pickling in a bath and the minimum average coating weight on steel sections 5 mm thick and over shall be 610 g/m^2 (DFT = 85µ) .

On removal from the galvanizing bath, the resultant coating shall be smooth, continuous, free from gross surface imperfections such as bare spots, lumps, blisters and inclusions of flux, ash or dross.

Galvanized contact surfaces to be joined by high-tensile friction-grip bolts shall be roughened before assembly so that the required slip factor (defined in B.S. 3294, part 1 and B.S. 4604, part 1) is achieved. Care shall be taken to ensure that the roughening is confined to the area of the mating faces.

Bolts, nuts and washers, including general grade high-tensile friction grip bolts (referred to in B.S. 3139, and B.S.4395 part 1) shall be hot dip galvanized and subsequently centrifuged (according to B.S. 729). Nuts shall be tapped up to 0.4 mm oversize after galvanizing and the threads oiled to permit the nuts to be finger-turned on the bolt for the full depth of the nut. No lubricant, applied to the projecting threads of galvanized high-tensile friction-grip bolt after the bolt has been inserted through the steelwork, must be allowed to come into contact with the mating faces of the steelwork,. A local remelting of the galvanized parts to achieve the nuts to be finger turned on the bolt is possible in accordance with DIN 50976.

Protected slings must be used for offloading and erection. Galvanized work which is to be stored at the works or on site shall be stacked so as to provide adequate ventilation to all surfaces to avoid wet storage staining (white rust).

Small areas of the galvanized coating damaged in any way shall be restored in accordance with DIN 55928, part A and DIN 50976 by:

- Cleaning the area of any weld slag rust and other impurities and by thorough wire brushing to give a metallic clean surface.

- Application of suitable number of coats of zinc-rich paint containing more than 90 % w/w of zinc in dried film. The dry film thickness shall exceed at least 50 % the thickness of the desired galvanization. In case of application of a low melting point zinc alloy repair rod, the rods shall be in accordance with DIN1707, the thickness of the alloy shall be at least as of the desired galvanization.

The restored area is not to exceed 1 % of the galvanized surface.

Surface restoration of parts in contact with drinking water is not allowed and the quality of the galvanization is to be in accordance with DIN 2444.

After fixing, bolt heads, washers and nuts shall receive two coats of zinc-rich paint. Connections between galvanized surfaces and copper, copper alloy or aluminum surfaces shall be protected by suitable preferably hydrophobe tape wrappings to the owner's approval.

15.0.0 SPRAYED METAL COATINGS

Corrosion protection may be also achieved by spraying of suitable metals as zinc and/or aluminum on the surfaces of structures. For special cases tin, copper, lead can be used as well. Methods of surface preparation have to conform to B.S. 2569 or to DIN 8567. A proper treatment of the surface followed by an immediate spraying is to apply to ensure adhesion of the sprayed metal. The surface has to be clean, free of impurities, rust, mill scale and rough enough to have binding properties to ensure good enticulation with the sprayed layer. Suitable roughness can be achieved by blast cleaning acc. to BS 4232 or DIN 8567. Welds are to be cleaned and prepared with special care. All surfaces to be treated have to be dry and accessible.

Application of coatings, requirements for thickness, adhesion, composition of coating metals, and subsequent treatment have to conform to BS 2569, DIN 8565 and 8567.

Testing of the spray coated layers are to be carried out in accordance with DIN 8565.

The contractor has to specify the type, composition and thickness of the sprayed metal and of the sealing coating according to DIN 8565 including the corresponding warranties and tests if, sprayed metal coating will be applied.

Safety of work:

All precautions connected with this type of application of corrosion protection have to be in accordance with German regulation DVS 2307, page 1. 2.

Sprayed, unfused coating of metals and metallic compounds applied by combustion gas flame, plasma arc, detonation and similar processes, and the preparation of components, spraying techniques, sealing, finishing and inspection shall be according to B.S. 4761.

The hot galvanized surface has to be cleaned before the application of the coats to remove corrosion products, dirt, dust, grease.

The cleaning can be achieved by

- brush off
- washing with 1 - 1.5 % ammonia water with up to 0.1 % detergent added and followed by wet grinding to turn the foam to grey color,
- steam blasting.

16.0.0 WARNING NOTES / SIGNALS

This Instruction serves the identification of the coated surfaces that are received from shop in assembled condition / module wise.

The warning note shall prevent any possible damage to the coated surfaces during transportation / assembly at site.

Eg.: Welding work OR Heat treatment work on the outside of coated or lined surfaces is prohibited.

17.0.0 COLOUR CODE FOR PIPING

a. The colour code scheme is intended for identification of the individual group of the pipeline. The system of colour coding consists of a ground colour and colour bands superimposed on it. The colour coding for the identification of pipelines shall comply with **Annex – 25.1.1** of this specification.

Ground Colour shall be applied throughout the entire length for un insulated pipes. For insulated pipes, on the metal cladding or on the pipes of material such as non-ferrous metals, austenitic stainless steel etc., ground colour coating of minimum 2m length or of adequate length not to be mistaken as colour band shall be applied at places requiring colour bands. Colour band(s) shall be applied at the following location.

i. At battery limit points

ii. Intersection points & change of direction points in piping ways.

iii. Other points, such as midway of each piping way, near valves, junction joints of service appliances, walls, on either side of pipe culverts.

iv. For long stretch/yard piping at 50 M interval.

v. At start and terminating points.

b. Flow direction shall be indicated by an arrow in the location stated above and as directed by Engineer. Colors of arrows shall be black or white and in contrast to the color on which they are superimposed. The size of the arrows shall confirm to IS:2379. Product names shall be marked at pump inlet, outlet and battery limit in a suitable size as approved by Engineer. As a rule minimum width of color band shall conform to 75 mm up to 300 NB and to 100 mm over 350 NB. Whenever it is required by the Engineer to indicate that a pipeline carries a hazardous material, a hazard marking of diagonal stripes of red and golden yellow as per IS:2379 shall be painted on the ground color.

c. All uninsulated piping systems, hangers and supports shall have two coats of suitable primer coats and with suitable finish paints as per Annex 25.1.2 Painting system. Shades shall be as per IS 5 or as indicated by Owner /Engineer. Service of the pipe/line designations shall be painted on all pipes at visible locations.

18.0.0 IDENTIFICATION OF VESSELS, PIPING ETC.

Equipment number shall be stenciled in black or white on each vessel, column, equipment and machinery after painting.

Line number in black or white shall be stenciled on all the pipelines of more than one location as directed by Engineer; size of letters printed shall be 150 mm (high) for column & vessels. 50 mm (high) for pump compressor and other machinery and shall be as per IS: 9404 for piping. The storage tanks shall be marked as detailed in the respective drawing.

19.0.0 INSPECTION AND TESTING

a) All painting materials including primers and thinners brought to site for application shall be procured directly from manufacturer as per specifications and shall be accompanied by manufacturer's test certificates. Paint formulations without certificates are not acceptable. Engineer at his discretion, may call for tests for paint formulations. Contractor shall arrange to have such tests performed including batch wise test of wet paints for physical & chemical analysis. All costs thereof shall be borne by the contractor. The paints shall be tested as per IS: 101 / equivalent international standard and approved by the Owner.

b) The painting work shall be subject to inspection by Engineer at all times. In particular, following stage wise inspection shall be performed and contractor shall offer the work for inspection and approval of every stage before proceeding with the next stage. The record of inspection shall be maintained in the registers. Stages of inspection shall be surface preparation, primer application and each coat of paint. In addition to above, record shall include type of shop primer already applied on equipment e.g. red oxide zinc chromate or zinc phosphate or Silicate primer etc.

c) Any defect noticed during the various stages of inspection shall be rectified by the contractor to the entire satisfaction of Engineer before proceeding further. Irrespective of the inspection, repair and approval at intermediate stages of work, contractor shall be responsible for making good of any defects found during final inspection/guarantee period/defect liability period as defined in general condition of contract. Dry film thickness (DFT) shall be checked and recorded after application of each coat and extra coat of paint shall be applied to make-up the DFT specified without any extra coat to the Owner.

20.0.0 GUARANTEE

The contractor shall guarantee that the chemical and physical properties of paint materials used are in accordance with the specifications contained herein/to be provided during execution of work. The contractor shall produce test reports from the manufacturer regarding the quality of the particular batch of paint supplied. The Engineer shall have the right to test wet samples of paint at random for quality of the same. Batch test reports of the manufacturer's for each batch of paints supplied shall be made available by the contractor.

ANNEX-25.1.1

STANDARD FINAL COLOUR OF EQUIPMENT AND PIPING

1.0.0 STANDARD COLOUR CODE FOR MECHANICAL EQUIPMENT

Sl. No.	Description	Ground Colour
A	**CLOSED COOLING WATER SYSTEM**	
1	Closed cooling water pumps	Sea Green
2	Plate heat exchanger	Sea Green
3	Closed Cycle cooling Water (CCCW) pumps	Sea Green
4	CCCW Expansion tank	Sea Green
5	CCCW chemical dosing tank	Sea Green
B	**WATER TREATMENT PLANT**	
1	Raw water	
a	Raw water pump	Sea Green
b	Clarifier	Sea Green
c	- Raw / Fire water storage tank	Sea Green
d	DM plant supply pump	Sea Green
e	Filter air blower	Sea Green
f	Filter back wash pump	Sea Green
g	Lime slaking tank & agitator	Sea Green
h	Lime slurry transfer pump	Sea Green
I	Lime solution tank	Sea Green
j	Lime solution dosing pump	Sea Green
k	Alum solution tank	Sea Green
l	Alum solution metering pump	Sea Green
m	Polyelectrolyte solution tank	Sea Green
n	Polyelectrolyte solution metering pump	Sea Green
o	Sludge feed pump	Sea Green
p	Filter press	Sea Green
q	Service water tank for DM building	Sea Green
r	Service water tank for control annex	Sea Green
2	Demineralization system	
a	Activated carbon filter	Sea Green
b	Cation exchanger	Sea Green
c	Anion exchanger	Sea Green
d	Degasser tower	Sea Green
e	Air blower for degasser tower	Sea Green
f	Strong base anion exchanger	Sea Green
g	Degassed water transfer pump	Sea Green
h	Strong base anion exchanger	Sea Green
I	Mixed bed polisher	Sea Green
j	Air blower for mixed bed polisher	Sea Green
k	DM Water Storage tank	Sea Green
l	DM water transfer pump	Sea Green
m	Acid unloading cum transfer pump	Dark Admiralty Grey
n	Bulk acid storage tank	Dark Admiralty Grey
o	Acid measuring tank for SAC	Dark Admiralty Grey
p	Acid measuring tank for MB	Dark Admiralty Grey
q	Regeneration water pump	Dark Admiralty Grey
r	Caustic Lye unloading cum transfer pump	Dark Violet
s	Bulk caustic storage tank	Dark Violet
t	Caustic regeneration tank & agitator	Dark Violet

Sl. No.	Description	Ground Colour
u	Caustic solution filter	Dark Violet
v	Caustic dilution tank for SBA/WBA	Dark Violet
w	Caustic dilution tank for MB	Dark Violet
x	Caustic pump for regeneration for WBA/SBA	Dark Violet
y	Waste water recirculation cum disposal pump	Sea Green
C	**CRANE & HOIST**	
1	Power house EOT crane	Canary Yellow
2	CW pump house EOT crane	Canary Yellow
D	**COMPRESSED AIR PLANT**	
1	Air compressor	Sky Blue
2	Compressed air dryer	Sky Blue
3	Air receiver	Sky Blue
E	**Chemical Dosing**	
1	Hydrazine preparation tank	Dark Admiralty Grey
2	Ammonia preparation tank	Dark Admiralty Grey
3	Hydrazine & ammonia dosing tank	Dark Admiralty Grey
4	Hydrazine & ammonia dosing pump	Dark Admiralty Grey
5	Phosphate preparation tank	Dark Admiralty Grey
6	Phosphate dosing tank	Dark Admiralty Grey
7	Phosphate dosing pump	Dark Admiralty Grey
8	Sampling system	Dark Admiralty Grey
F	**FIRE PROTECTION SYSTEM**	
1	Diesel engine driven pump	Fire Red
2	Fuel tank for diesel engine driven pump	Fire Red
3	Main hydrant pump (Electrical)	Fire Red
4	Jockey pump	Fire Red
5	Fire Water Storage tank	Fire Red
6	CO2 cylinder	Fire Red
G	**FUEL OIL SYSTEM**	
1	Fuel oil pumps skid	Light Brown
2	Fuel oil Storage tank	Light Brown
3	Fuel oil strainer	Light Brown
H	**ASH DISPOSAL SYSTEM**	
1	Ash transmitting vessel	Aluminium
I	**AIR CONDITIONING AND VENTILATION SYSTEM**	
1	Refrigerant compressor	Sky Blue
2	Chilled / condenser pumps	Sea Green
3	Condenser water pipe	Sea Green
4	Fans	Grey

Notes:

1. This color code basically refers to IS:2379 for piping with necessary modifications
2. For any item left out, color coding will be decided after Owner's approval.

2.0.0 STANDARD COLOUR CODE FOR ELECTRICAL EQUIPMENT

	Description	Colour	Colour No.
1	Generator	Two undercoats of high quality epoxy based primer followed by two coats of epoxy painting	
2	Generator circuit breaker a) Outdoor	-	RAL 7032
	b) Indoor	Glossy white	-
3	Transformers	Pebble grey	RAL 7032
4	Bus ducts	Pebble grey	RAL 7032
5	Junction boxes.	Pebble grey	RAL 7032
6	HT/LT Switchboards, Distribution boards, Control & Relay panels		
	a) Indoor	Pebble grey	RAL 7032
	b) Outdoor	Pebble grey	RAL 7032
7	UPS Panel, charger panels	Pebble grey	RAL 7032
8	DG Alternator	Onan Green	-
9	NGR	Pebble grey	RAL 7032
10	Motor	Pebble grey	RAL 7032
11	Lighting fittings	As per manufacturer's standard	As per manufacturer's standard
12	Cable trays	Galvanized	
13	Elevator	Red oxide primer paint	

1. For interior coating, manufacturer's standard can be adopted subject to Owner's approval.
2. All panels that are to be erected at CCR floor shall be painted using RAL 7032 (exterior colour). All Electrical, C&I, Fire alarm or any other panel shall have this colour.

3.0.0 COLOUR CODING FOR IDENTIFICATION OF PIPELINES USED IN THERMAL POWER PLANTS

		Ground Shade		Band Shade		
Sl.No	Medium	Color	Color No. as per IS:5	Color	Color No. as per IS:5	Remarks
1	Water system					
a)	Untreated or raw / service	Sea green	217	White	-	White is not included in IS - 5-2007
b)	Treated/dematerialized	Sea green	217	Light orange	557	
c)	Condensate	Sea green	217	Light brown	410	
d)	Potable water	Sea green	217	French blue	166	
e)	RO water	Sea green	217	Light orange	557	
f)	Service & clarified water	Sea green	217	French blue	166	
2	Steam system					
a)	Auxiliary steam	Aluminum	-	Signal red	537	with aluminum
3	Air system					
a)	Instrument	Sky Blue	101	White	-	
b)	Service/Plant	Sky Blue	101	White	-	White not included in IS-5 - 2007
c)	Vacuum pipes	Sky Blue	101	Black	-	Black not included in
4	Gas system					
a)	Hydrogen	Canary yellow	309	Signal red	537	
b)	Chlorine	Canary yellow	309	Dark violet	796	
c)	Carbon dioxide	Canary yellow	309	Light grey	631	
d)	Oxygen	Canary yellow	309	White	218	White is not included in
5	Oils					

		Ground Shade		Band Shade		
Sl.No	Medium	Color	Color No. as per IS:5	Color	Color No. as per IS:5	Remarks
a)	LDO/HFO	Light brown	410	Brilliant green	221	
b)	Transformer oil	Light brown	410	Light orange	557	
6	Chemical feed					
a)	Acid piping (in water treatment plant)	Dark admiralty grey	632	Signal red	537	Hazard mark is given
b)	Alkali Piping (in water treatment plant)	Dark violet	796	Golden yellow	356	Hazard mark is given
7	Fire services	Fire red	536	-	-	-
8	Effluent pipes	Black	-	-	-	-

4.0.0 COLOUR CODE FOR STRUCTURAL STEEL

SL. NO	ITEAM/SERVICE	COLOR	COLOR No. as per IS:5
1	Gantry girder & monorail	Brilliant green	221
2	Gantry girder & monorail stopper	Signal red	537
3	Building structural steel columns brackets, beams bracings, roof truss, purloin, side grit, louvers, stringers	Dark admiralty grey	632
4	Pipe rack structure & trestle	Dark admiralty grey	632
5	Chequered plate (Plain Face)	Black	-
6	Grating	Black	-
7	Ladder	Dark admiralty grey	632
8	Hand railing Hand rail	Signal red	537
9	Middle rail	Signal red	537
10	Toe Plate	Signal red	537
11	Vertical post	Black	-
12	Structural steel for Silo	Smoke grey	692

Notes

1. Covering capacity and DFT depends on method of application. Covering capacity specified above is theoretical. Allowing the losses during application, min specified DFT shall be maintained.

2. All primers and finish coats shall be cold cured and air dried unless otherwise specified.

3. All paints shall conform to relevant Indian Standard and shall be applied in accordance with manufacturer's instructions for surface preparation, intervals, curing and application. The surface preparation, quality and workmanship shall be ensured.

4. Technical data sheets for all paints shall be supplied at the time of submission of quotations.

5. In case of use of epoxy tie coat, manufacturer shall demonstrate satisfactory test for inter coat adhesion. In case of limited availability of epoxy tie coat, alternate system may be used taking into consideration the service requirement of the system.

6. Contractor will submit the final colour shade for all equipments & piping under his scope for final approval by client / consultant.

ANNEX 25.1.2 PAINTING SYSTEMS						
Cleaning, Protective Coating and Painting - Systems designed as per ISO 12944 with service life of 10 yrs.						
Surface/ Location	**Temp**					
		Surface prep	**Coat**	**No. of coats**	**Generic Type**	**Dft/Coat**
Structural Steel work, piping (Oil + Water), tanks outside surface, transmission towers cranes, steel floors, galleries, stairways, Outdoor.	< 130 Deg	SA 2 1/2	Primer	1	Solvent based IZS - VS of 60%. Zn Dust - 1.77 kg/ltr minimum. Zn dust by weight - minimum 85%. Pot life 12 hrs / 21 Deg.- Paint to meet compositional & performance specifications for SSPC Paint 20 , Level 1	75
			Touch up	1	Two component Zinc rich Primer meeting performance and compositional specifications of SSPC Paint 20 Level2	(75)
			Mid coat	1	2 pack High build High Solid Lamellar MIO based Epoxy Mid coat.	200
			Finish	1	2 pack Acrylic Aliphatic Polyurethane top coat - with Gloss retention of at least 90% on QUVB exposure of minimum 1000 hrs.	75
					Total	**350**
Structural Steelwork, piping, indoor and outdoor	130 to 200 Deg	SA 2 1/2	Primer	1	Solvent based IZS - VS of 60%. Zn Dust - 1.77 kg/ltr minimum. Zn dust by weight - minimum 85%. Pot life 12 hrs / 21 Deg.- Paint to meet compositional & performance specifications for SSPC Paint 20 , Level 1.	75
			Touch up	1	Two component Zinc rich Primer meeting performance and compositional specifications of SSPC Paint 20 Level2	(75)
			Sealer	1	Single pack Heat Resistant Silicon Acrylic Finish paint.	25
			Finish	2	Single pack Heat Resistant Silicon Acrylic Finish paint.	25
					Total	**150**
Alternative -2		SA 2 1/2	Primer	1	Solvent based IZS - VS of 60%. Zn Dust - 1.77 kg/ltr minimum. Zn dust by weight - minimum 85%. Pot life 12 hrs / 21 Deg.- Paint to meet compositional & performance specifications for SSPC Paint 20 , Level 1.	75
				1	Single pack Moisture Cured, Inorganic Silicate based heat resisting finish up to 400 Deg - Grey shade./ white/ Aluminium.	50
			Finish	1		50
					Total	**175**
Alternative-3			Finish	1	Single pack Heat Resistant Silicon Acrylic Finish paint. - either Aviation White/ Aviation Orange.	80
					Total	**155**
Structural Steel work Piping, Un-insulated	200 to 400	SA 3	Primer	1	Solvent based IZS - VS of 60%. Zn Dust - 1.77 kg/ltr minimum. Zn dust by weight - minimum 85%. Pot life 12 hrs	75

ANNEX 25.1.2 PAINTING SYSTEMS						
Cleaning, Protective Coating and Painting - Systems designed as per ISO 12944 with service life of 10 yrs.						
Surface/ Location	**Temp**					
		Surface prep	**Coat**	**No. of coats**	**Generic Type**	**Dft/Coat**
Carbon Steel Indoor and Outdoor	Deg C.				/ 21 Deg.- Paint to meet compositional & performance specifications for SSPC Paint 20 , Level 1.	
			Touch up	1	Two component Zinc rich Primer meeting performance and compositional specifications of SSPC Paint 20 Level 2.	(75)
			Finish	2	Heat Resisting Silicon Aluminium Paint. VS to be min 28%.	20
					Total	**115**
Carbon steel surfaces subjected to temperature up to 400℃. But Under Thermal Insulation.	< 400℃	Power tool cleaning to St 2 /3		**2**	Red-oxide Zinc phosphate primer to IS 12744	**30**
						60
Components coming in the gas path (other than Coils), including water walls, SH panels, SH Headers, Hot air ducts etc.		Power tool cleaning		**2**	Red-oxide Zinc phosphate primer to IS 12744	**30**
						60
Structural Steel work, Piping (Oil + water) , Tanks Indoor.	<130 Deg.C	SA 3	Primer	1	Solvent based IZS - VS of 60%. Zn Dust - 1.77 kg/ltr minimum. Zn dust by weight - minimum 85%. Pot life 12 hrs / 21 Deg.- Paint to meet compositional & performance specifications for SSPC Paint 20 , Level 1.	75
			Touch up	1	Two component Zinc rich Primer meeting performance and compositional specifications of SSPC Paint 20 Level2	(75)
			Mid coat	2	2 pack High build High Solid Lamellar MIO based Epoxy Mid coat.	100
			Finish	2	Two component Polyamide Cured Epoxy Coating.	25
					Total	**325**
Structural Steel work in the battery rooms, chlorination plant and	Ambient	SA 3	Primer	1	Solvent based IZS - VS of 60%. Zn Dust - 1.77 kg/ltr minimum. Zn dust by weight - minimum 85%. Pot life 12 hrs / 21 Deg.- Paint to meet compositional & performance	75

ANNEX 25.1.2 PAINTING SYSTEMS						
Cleaning, Protective Coating and Painting - Systems designed as per ISO 12944 with service life of 10 yrs.						
Surface/ Location	**Temp**					
		Surface prep	**Coat**	**No. of coats**	**Generic Type**	**Dft/Coat**
water treatment plant, (extremely aggressive atmosphere)					specifications for SSPC Paint 20 , Level 1	
			Touch up		Two component Zinc rich Primer meeting performance and compositional specifications of SSPC Paint 20 Level2	(75)
			Mid coat	1	Two component, high build rust encapsulating, aluminium pigmented modified epoxy coating.	125
			Finish	1	Two component High Build high Solid Aliphatic Amine Cured Epoxy coating. - Min VS 85%	150
					Total	**350**
Steel Tanks inside Surface (Total) for Oil Storage	Normal	SA 2.5	Primer	1	Two component high build amine cured epoxy Primer with zinc phosphate pigment.	75
			Finish	2	Two component Self priming High Build Polyamine adduct cured epoxy coating.	125
					Total	**325**
Alternative-1			Finish	3	Two component Self priming High Build Polyamine adduct cured epoxy coating. **(No primer required. Self priming coating post blasting)**	125
					Total	**375**
Alternative-2			Finish	2	Two component High build high solid Solvent free epoxy coating - certified by CFTRI for Potable water usage.**(Primer same as above)**	150
					Total	**300**
Steel Tanks inside Surface (Total) for Water Storage (Potable and Distilled Water)	Ambient	SA 3	Primer	1	Two component high build polyamide cured zinc phosphate Primer	75
			Finish	2	Two component Self priming High Build Polyamine adduct cured epoxy coating - certified by CFTRI for Potable water usage.	125
					Total	**325**
Alternative 1			Finish	2	Two component High build high solid Solvent free epoxy coating - certified by CFTRI for Potable water usage. **(No primer required. Self priming coating post blasting)**	200
					Total	**400**
Steelwork immersed in	< 60	SA 3	Primer	1	Two component High Build High Solid Rapid Curing Epoxy	75

ANNEX 25.1.2 PAINTING SYSTEMS						
Cleaning, Protective Coating and Painting - Systems designed as per ISO 12944 with service life of 10 yrs.						
Surface/ Location	**Temp**					
		Surface prep	**Coat**	**No. of coats**	**Generic Type**	**Dft/Coat**
seawater such as inlet/ outlet structures, dolphins, sheet piling	Deg C				Zinc Phosphate Primer.	
			Finish	1	Two component High build High Solid Modified Epoxy coating.	500
					Total	**575**
			Wherever TAR based product is not to be recommended.			
			Finish	1	Two component High build High Solid Modified Epoxy coating	500
					Total	**500**
			Finish	1	Two component High build High Solid Modified Epoxy coating with Glass Flake.	500
					Total	**500**
Alternative 1						
Cast Iron Water pipelines - Outside surface, buried in Soil	< 60 Deg C	SA 3	Primer	1	Solvent based IZS - VS of 60%. Zn Dust - 1.77 kg/ltr minimum. Zn dust by weight - minimum 85%. Pot life 12 hrs / 21 Deg.- Paint to meet compositional & performance specifications for SSPC Paint 20 , Level 1	75
			Finish	2	Polyamide Cured Coal Tar Epoxy, Vs min 65% black.	200
					Total	**475**
Alternate-1			Finish	1	Two component High build High Solid Modified Epoxy coating	500
Alternate -2			Finish	1	Two component High build High Solid Modified Epoxy coating with Glass Flake	500
Steel Pipes - Inside surfaces such as cooling water lines.	< 60 Deg C	SA 3	Primer	1	Solvent based IZS - VS of 60%. Zn Dust - 1.77 kg/ltr minimum. Zn dust by weight - minimum 85%. Pot life 12 hrs / 21 Deg.- Paint to meet compositional & performance specifications for SSPC Paint 20 , Level 1.	75
			Finish	2	Coal Tar Epoxy, Vs min 65% black.	225
					Total	**525**
Water Pipelines - Outside Surface, Indoor	< 60 Deg C	SA 3	Primer	1	Solvent based IZS - VS of 60%. Zn Dust - 1.77 kg/ltr minimum. Zn dust by weight - minimum 85%. Pot life 12 hrs / 21 Deg.- Paint to meet compositional & performance specifications for SSPC Paint 20 , Level 1.	75
			Touch	1	Two component Zinc rich Primer meeting performance and	(75)

ANNEX 25.1.2 PAINTING SYSTEMS						
Cleaning, Protective Coating and Painting - Systems designed as per ISO 12944 with service life of 10 yrs.						
Surface/ Location	**Temp**					
		Surface prep	**Coat**	**No. of coats**	**Generic Type**	**Dft/Coat**
			up		compositional specifications of SSPC Paint 20 Level2	
			Finish	2	Two component High Build high Solid Aliphatic Amine Cured Epoxy coating. - Min VS 85%	100
					Total	**275**
Oil pipelines - Outside surface, above ground	< 100 Deg C	SA 3	Primer	1	Solvent based IZS - VS of 60%. Zn Dust - 1.77 kg/ltr minimum. Zn dust by weight - minimum 85%. Pot life 12 hrs / 21 Deg.- Paint to meet compositional & performance specifications for SSPC Paint 20 , Level 1.	75
			Touch up		Two component Zinc rich Primer meeting performance and compositional specifications of SSPC Paint 20 Level2	(75)
			Mid coat	2	Two component High Build high Solid Aliphatic Amine Cured Epoxy coating. - Min VS 85%	100
			Finish	1	2 pack Acrylic Aliphatic Polyurethane top coat - with Gloss retention of at least 90% on QUVB exposure of minimum 1000 hrs.	75
					Total	**350**
Pumps, Motors, Turbine, Claddings, Steam Turbine Condenser, Indoor	Up to 90 Deg	SA 2.5	Primer	1	Catalysed Zn rich Primer with a VS of 60% min, complying to SSPC Paint 20 level 2.	75
			Finish	2	Two component High Build high Solid Aliphatic Amine Cured Epoxy coating. - Min VS 85%.	100
					Total	**275**
Alternative 1		SA 2.5	Primer	1	Catalysed Zn rich Primer with a VS of 60% min, complying to SSPC Paint 20 level 2.	75
			Mid coat	1	Two component High Build high Solid Aliphatic Amine Cured Epoxy coating. - Min VS 85%.	100
			Finish	2	2 pack Acrylic Aliphatic Polyurethane top coat - with Gloss retention of at least 90% on QUVB exposure of minimum 1000 hrs.	75
					Total	**250**
Heat Exchangers - Inside Surface.	Up to 60 Deg	SA 2.5	Primer	1	Solvent based IZS - VS of 60%. Zn Dust - 1.77 kg/ltr minimum. Zn dust by weight - minimum 85%. Pot life 12 hrs / 21 Deg.- Paint to meet compositional & performance specifications for SSPC Paint 20 , Level 1.	75
			Finish	2	Coal Tar Epoxy, Vs min 65% black.	200

ANNEX 25.1.2 PAINTING SYSTEMS						
Cleaning, Protective Coating and Painting - Systems designed as per ISO 12944 with service life of 10 yrs.						
Surface/ Location	**Temp**					
		Surface prep	**Coat**	**No. of coats**	**Generic Type**	**Dft/Coat**
					Total	**475**
Heat exchanger Coils coming in the gas path . (Eco, SH, RH coils & Loose tubes etc.)		Power tool cleaning			One coat of dip-coat paint -Red-oxide Zinc phosphate primer	35
Instrument panels, Electrical cubicles and similar steel sheet – indoor **(Can be used on Aluminium, steel, stainless steel and galvanized substrates.)**	Ambient	Oil grease and contaminatnts must be removed	Primer	1	Two pack , high build siloxane modified epoxy primer with zinc phosphate pigment.	75
			Mid coat	1	Two component High Build Surface Tolerant Epoxy coating pigmented with Aluminium and Lamellar Micaceous iron oxide	100
			Top coat	1	Two component High Build high Solid Aliphatic Amine Cured Epoxy coating. - Min VS 85%	100
					Total	**275**
Instrument panels, Electrical cubicles and similar steel sheet – outdoor **(Can be used on Aluminium, steel, stainless steel and galvanized substrates.)**	Ambient	Oil grease and contaminatnts must be removed	Primer	1	Two pack , high build siloxane modified epoxy primer with zinc phosphate pigment.	100
			Mid coat	1	Two component High Build Surface Tolerant Epoxy coating pigmented with Aluminium and Lamellar Micaceous iron oxide.	150
			Top coat	1	2 pack Acrylic Aliphatic Polyurethane top coat - with Gloss retention of atleast 90% on QUVB exposure of minimum 1000 hrs.	75
					Total	**325**
Substrate, base metal: Carbon steel, HDG acc ISO 1461 Or. Equiv. Non Insulated. - Outdoor	<120 Deg	Air blasting with Nonmetallic abrasive Powder	Touch up	1	Two component Zinc rich Primer meeting performance and compositional specifications of SSPC Paint 20 Level2	(75)
			Primer	1	Two pack , high build siloxane modified epoxy primer with zinc phosphate pigment.	50
			Mid coat	1	Two component High Build Surface Tolerant Epoxy coating pigmented with Aluminium and Lamellar Micaceous iron oxide	150

ANNEX 25.1.2 PAINTING SYSTEMS						
Cleaning, Protective Coating and Painting - Systems designed as per ISO 12944 with service life of 10 yrs.						
Surface/ Location	**Temp**					
		Surface prep	**Coat**	**No. of coats**	**Generic Type**	**Dft/Coat**
			Finish	1	2 pack Acrylic Aliphatic Polyurethane top coat - with Gloss retention of atleast 90% on QUVB exposure of minimum 1000 hrs.	75
					Total	**275**
Substrate, base metal: Carbon steel, HDG acc ISO 1461 Or. Equiv. Non Insulated.- Indoor	<120 Deg	Air blasting with Nonmetallic abrasive Powder	Touch up	1	Two component Zinc rich Primer meeting performance and compositional specifications of SSPC Paint 20 Level 2.	75
			Primer	1	Two pack , high build siloxane modified epoxy primer with zinc phosphate pigment.	125
			Finish	1	Two component High Build high Solid Aliphatic Amine Cured Epoxy coating. - Min VS 85%.	100
					Total	**225**
			For Outdoor Application			
			Touch up	1	Two component Zinc rich Primer meeting performance and compositional specifications of SSPC Paint 20 Level2	(75)
			Primer	1	Two pack , high build siloxane modified epoxy primer with zinc phosphate pigment.	125
			Finish	1	2 pack Acrylic Aliphatic Polyurethane top coat - with Gloss retention of at least 90% on QUVB exposure of minimum 1000 hrs.	75
					Total	**200**
			For Indoor Application			
Substrate, Stainless Steel - Non insulated.	< 120 Deg	Air blasting with Nonmetallic abrasive Powder	Primer	1	Two pack , high build siloxane modified epoxy primer with zinc phosphate pigment.	125
			Finish	1	Two component High Build high Solid Aliphatic Amine Cured Epoxy coating. - Min VS 85%	100
					Total	**225**
			For Outdoor Application			
			Primer	1	Two pack , high build siloxane modified epoxy primer with zinc phosphate pigment.	125
			Finish	1	2 pack Acrylic Aliphatic Polyurethane top coat - with Gloss retention of atleast 90% on QUVB exposure of minimum 1000 hrs.	75
					Total	**200**
Applicable for Water -				**For Indoor Application**		

ANNEX 25.1.2 PAINTING SYSTEMS						
Cleaning, Protective Coating and Painting - Systems designed as per ISO 12944 with service life of 10 yrs.						
Surface/ Location	**Temp**					
		Surface prep	**Coat**	**No. of coats**	**Generic Type**	**Dft/Coat**
Water Cooled heat Exchangers like Condensers, Flash box, Water - Water coolers etc. For Outdoor installations in corrosive atmosphere - like Chemical/ Marine.	< 120 Deg	Air blasting with Nonmetallic abrasive Powder	Primer	1	Two pack , high build siloxane modified epoxy primer with zinc phosphate pigment.	75
			Top coat	2	Two component High Build high Solid Aliphatic Amine Cured Epoxy coating. - Min VS 85%.	100
					Total	**275**
				For Outdoor Application		
			Primer	1	Two pack , high build siloxane modified epoxy primer with zinc phosphate pigment.	125
			Mid coat	1	Two component High Build high Solid Aliphatic Amine Cured Epoxy coating. - Min VS 85%.	100
			Top coat	1	2 pack Acrylic Aliphatic Polyurethane top coat - with Gloss retention of at least 90% on QUVB exposure of minimum 1000 hrs.	75
					Total	**300**

COPYRIGHT AND CONFIDENTIAL
The information on this document is the property of BHARAT HEAVY ELECTRICALS LIMITED,
It must not be used directly or indirectly in any way detrimental to the interest of the company.

QAP GUIDELINES & FORMAT

(ANNEXURE - 7)

The QAP format and guidelines for filling up the format shall be used by vendor for preparation and submission of QAP after order placement.

Note :

1. Typical /Indicative /Standard QAP(s) for equipment /package attached is reference document and to use by successful bidder in future for preparation and submission of QAP for BHEL /CUSTOMER approval.

2. No deviation to reference document is acceptable.

COPYRIGHT AND CONFIDENTIAL
The information on this document is the property of BHARAT HEAVY ELECTRICALS LIMITED .
It must not be used directly or indirectly in any way detrimental to the interest of the company.

GUIDELINES TO VENDORS FOR PREPARATION OF QUALITY ASSURANCE PLAN

1. QAP shall be made in landscape mode on A4 size paper as per the format enclosed. Font size shall be minimum 10.

2. Each page of QAP shall contain the following information.
   a) Vendor's name & address.
   b) Customer: BHEL, Hyderabad.
   c) Project.
   d) BHEL Product Standard Number/revision number as referred in P.O.
   e) BHEL Purchase Order Number & Date.
   f) Product as per P.O. description.
   g) QAP Number (unique and shall not repeat)/revision number/date.
   h) Page number and number of pages

3. QAP shall contain four parts / stages as follows.
   a) Raw materials and bought out items.
   b) In process Control / Inspection.
   c) Final assembly, Inspection & Testing.
   d) Painting, preservation & packing.

4. Under 'Component', indicate name of the component (say casing, rotor, pressure gauge, etc).

5. Under 'Characteristics', indicate appropriately (say chemical analysis, mechanical properties, NDT (UT,DP etc.), hydrostatic test, calibration check etc.)

6. Under 'Class', indicate minor, major or critical depending on the importance of characteristic.

7. Under 'Type of check', indicate appropriately (say chemical, mechanical, UT, DP etc.)

8. Under 'Quantum of check', indicate appropriately (say 100%, 10%, sample, per melt, per heat, all pieces etc.)

9. Under 'Reference document' and 'Acceptance norms', appropriate National & International standards, BHEL standards, approved drawing references etc. should be indicated. It is not correct to mention as "Vendor's internal standards or Vendor's standard practice etc.". If vendors' internal standards are referred, same shall be in line with BHEL Spec. indicated in the P.O. These may require review & approval by our Engineering dept.

10. Under 'Format of record', indicate appropriately supplier's test certificate, calibration certificate, lab report, inspection report etc.

11. Please refer 'Agency' in QAP format.
    Under P: Perform, W: Witness, V: Verify
    Indicate against each characteristic 1: (BHEL CQS/Nominated inspection agency), OR

2: (Vendor / Sub vendor)
Note: Performing agency is normally vendor or his sub vendor (Legend 2). Where witness points are indicated in specification, P.O., Drawing etc., for such operations, Under Witness (W) column use 1. Under 'Verify' column, use code1.

12. Under 'D' please put (□ Tick) against each characteristic where vendor proposes to submit test certificate/report etc. OR as required as per BHEL Specification.

13. Vendor's signature & stamp should be available on each page of QAP.

14. Vendor should read the BHEL Product Standard thoroughly and QAP should be made only inline and relevant to the Specification & Approved Drawings.

15. The following operations/characteristics/check points may be included (AS APPROPRIATE)
    a) Visual check
    b) Dimensional check
    c) Mechanical and Chemical properties.
    d) Surface preparation before painting (by chemical cleaning, sand blasting, shot blasting etc. as the case may be.)
    e) Painting check for shade, Dry Film Thickness (DFT), Adhesion/ peel off test etc.
    f) Check for correctness for all components mounted as per General arrangement Drawing, Bill Of Materials (BOM), etc. for range, rating, make, color, size, location as per GA, quantity, label description including tag nos., annunciator facia, loose components, accessories, spares etc.
    g) Verification of test certificate for protection class for the enclosures.
    h) Mechanical functioning of switches.
    i) Continuity of earthing and provision of earth points.
    j) Colour coding of wiring, size, tightness & dressing of wiring.
    k) Review of test certificates of assembled items, raw materials, internal test reports etc.
    l) Witness of functional checks, which may include mechanical run & electrical run, H.V.test, IR measurement, Electrical and Mechanical tests etc.
    m) PQR, WPS, Welder Qualification Record, welding records (fit up, DP) etc.
    n) Material identification (for punch marks of serial numbers, Heat No, Melt No, Inspector's stamp etc.)
    o) Hydraulic Pressure Test, Pneumatic Pressure Test, Liquid Penetration Examination and other Non-Destructive Tests.
    p) Tests on Galvanised items (Visual, Hammer Test, Knife Test, Thickness, Pierce Test (Copper sulphate test), Hydrogen evaluation test, Stripping test (for Mass of Zinc coating)
    q) All tests as per BHEL Product Standard & approved drawings including Type tests and Routine tests on individual items and on System as a whole.
    r) Packing and Preservation.

16. **QAP Format enclosed.**

17. Typical Manufacturing QAP(s) is /are attached.

COPYRIGHT AND CONFIDENTIAL
The information on this document is the property of BHARAT HEAVY ELECTRICALS LIMITED .
It must not be used directly or indirectly in any way detrimental to the interest of the company.

VENDOR'S NAME & ADDRESS:	**MANUFACTURING QUALITY PLAN**	QP. NO.:	
	CUSTOMER: BHEL, HYDERABAD – 32. PROJECT: PRODUCT:	BHEL P.O.NO.: P.O.DATE: BHEL SPEC: REV:	REV NO: DATE: PAGE 1 OF 1

SL NO	COMPONENTS	CHARACTERISTICS	CLASS	TYPE OF CHECK	QUANTUM OF CHECK	REFERENCE DOCUMENT	ACCEPTANCE NORMS	FORMAT OF RECORD	* D	AGENCY P	AGENCY W	AGENCY V	REMARKS
1.0	**RAW MATERIALS & BOUGHT OUT ITEMS**												
2.0	**INPROCESS INSPECTION**												
3.0	**FINAL INSPECTION & TESTING**												
4.0	**PRESERVATION & PACKING**												

VENDOR TO NOTE: THIS FORMAT IS IN MICROSOFT WORD. HEADER & FOOTER SHALL BE AVAILABLE IN EACH PAGE OF QP. QP SHALL BE IN LANDSCAPE & A4 SIZE ONLY. FONT SIZE SHALL BE MIN 10. VENDOR SHALL SIGN & STAMP IN EACH PAGE OF QP. LOI REF. & DATE ARE NOT ACCEPTABLE. P.O.NO. & DATE SHALL BE INDICATED. QP NO. SHOULD BE UNIQUE AND SHALL NOT REPEAT. ALL THE TESTS / CHECKS INDICATED IN THE BHEL SPEC. SHALL BE INDICATED IN THE QP.

LEGEND: P: PERFORM, W: WITNESS, V: VERIFICATION. INDICATE 1 FOR BHEL CQS (OR BHEL NOMINATED INSPECTION AGENCY) & 2 FOR VENDOR/SUB VENDOR AS APPROPRIATE AGAINST EACH COMPONENT /CHARACTERISTIC UNDER P, W & V COLUMNS. * FOR ITEMS MARKED ✓ (TICK) IN COLUMN 'D', TEST CERTIFICATES SHALL BE SUBMITTED TO BHEL FOR RECORDS.	PREPARED BY VENDOR'S SIGNATURE & STAMP	APPROVED BY BHEL QA SIGNATURE & STAMP	APPROVED BY CUSTOMER'S SIGNATURE & STAMP

	TYPICAL MANUFACTURING QUALITY PLAN	MQP. NO.:	
	PROJECT ENGINEERING & SYSTEMS DIVISION BHEL, RC PURAM, HYD-502032	PROJECT: PACKAGE: CENTRIFUGAL PUMP BHEL TECH SPEC:	REV NO: / DATE:
			PAGE 1 OF 4

SL NO	COMPONENTS	CHARACTERISTICS	CLASS	TYPE OF CHECK	QUANTUM OF CHECK	REFERENCE DOCUMENT	ACCEPTANCE NORMS	FORMAT OF RECORD	* D	AGENCY P	AGENCY W	AGENCY V	REMARKS
1.0	**RAW MATERIALS & BOUGHT OUT ITEMS**												
1.1	Casing	Visual check	Major	Visual	100%	Tech Spec/ Approved Datasheet/ Approved Drawing		--	--	2	2	--	
1.2		Dimensional check	Major	Measurements	100%			--	--	2	2	--	
1.3		Chemical & Mech. Properties	Major	Chemical & Mech. analysis	1 per heat/lot			MTC	√	2	2	1	
1.4		Heat treatment for all castings	Major	HT	100%			HT chart	√	2	2	1	
1.5	Impeller, Diffuser and Shaft	Chemical & Mech. Properties	Major	Chemical & Mech. analysis	1 per heat/lot			MTC	√	2	2	1	
1.6	Mechanical seal	Material and leakage check (Air test)	Major	OEM's certificate review	100%			OEM's certificate	√	2	2	1	
1.7	Bearing and bearing housing	Make and Model	Major	OEM's certificate review	100%			OEM's certificate	√	2	2	1	
1.8	Coupling	Chemical & Mech. Properties	Major	Chemical & Mech. analysis	1 per heat/lot			MTC	√	2	2	1	
1.9	Strainer (as applicable)	Chemical & Mech. Properties and hydro test	Major	OEM's certificate review	100%			OEM's certificate	√	2	2	1	
1.10	Instruments and JB (as applicable)	MOC, hydro test reports, Calibration reports and Type test certificates	100%	OEM's certificate review	100%			OEM's certificate	√	2	2	1	

LEGEND: P: PERFORM, W: WITNESS, V: VERIFICATION. INDICATE 1 FOR BHEL CQS (OR BHEL NOMINATED INSPECTION AGENCY) & 2 FOR VENDOR/SUB VENDOR AS APPROPRIATE AGAINST EACH COMPONENT /CHARACTERISTIC UNDER P, W & V COLUMNS. * FOR ITEMS MARKED ✓ (TICK) IN COLUMN 'D', TEST CERTIFICATES SHALL BE SUBMITTED TO BHEL FOR RECORDS.

SL NO	COMPONENTS	CHARACTERISTICS	CLASS	TYPE OF CHECK	QUANTUM OF CHECK	REFERENCE DOCUMENT	ACCEPTANCE NORMS	FORMAT OF RECORD	* D	AGENCY P	AGENCY W	AGENCY V	REMARKS
1.11	Interconnecting pipes and fittings (as applicable)	Chemical & Mech. Properties	Major	Chemical & Mech. Analysis	1 per heat/lot			MTC	√	2	2	1	
1.12	Wear rings, Gaskets, Flanges, and Fasteners	Chemical & Mech. Properties	Minor	Chemical & Mech. Analysis	1 per heat/lot			MTC	√	2	2	1	
2.0	**INPROCESS INSPECTION**												
2.1	Fabrication of casing and other components	WPS, PQR and WQR	Major	Document verification	100%	Tech Spec/ Approved Datasheet/ Approved Drawing		WPS, PQR and WQR	--	2	2	1	
2.2	Casing	NDE	Major	DPT/MPI	100%			NDE reports	√	2	1	--	
2.3		Leakage	Critical	Hydrostatic test	100%			Test reports	√	2	1	--	
2.4	Butt welds on casing (if any)	NDE	Major	RT	100%			IR	√	2	2	1	
2.5	Fillet welds on casing (if any)	NDE	Major	MPI	100%			IR	√	2	2	1	
2.6	Impeller and Diffuser	NDE	Major	DPT / MPI	100%			NDE reports	√	2	2	1	
2.7	Shaft	NDE	Major	DPT / MPI and UT (if shaft diameter > 50 mm)	100%			NDE reports	√	2	2	1	

LEGEND: P: PERFORM, W: WITNESS, V: VERIFICATION. INDICATE 1 FOR BHEL CQS (OR BHEL NOMINATED INSPECTION AGENCY) & 2 FOR VENDOR/SUB VENDOR AS APPROPRIATE AGAINST EACH COMPONENT /CHARACTERISTIC UNDER P, W & V COLUMNS. * FOR ITEMS MARKED ✓ (TICK) IN COLUMN 'D', TEST CERTIFICATES SHALL BE SUBMITTED TO BHEL FOR RECORDS.

SL NO	COMPONENTS	CHARACTERISTICS	CLASS	TYPE OF CHECK	QUANTUM OF CHECK	REFERENCE DOCUMENT	ACCEPTANCE NORMS	FORMAT OF RECORD	* D	AGENCY P	AGENCY W	AGENCY V	REMARKS
2.8	Wear rings	NDE and hardness test	Major	DPT and hardness test	100%			DP and hardness test reports	√	2	2	1	
2.9	Interconnecting Piping (as applicable)	NDE and leakage	Major	DPT and hydro test	100%			DPT and hydro test report	√	2	2	1	
2.10	Coupling	Dynamic balancing	Critical	Balancing	100%			IR	√	2	2	1	
2.11	Impeller	Dynamic balancing	Critical	Balancing	100%			IR	√	2	2	1	
2.12	Rotor assembly with coupling half	Dynamic balancing	Critical	Balancing	100%			IR	√	2	2	1	
3.0	**FINAL INSPECTION & TESTING**												
3.1	Motor driven pump with job motor and engine driven pump with calibrated shop motor	Overall Dimensions	Major	Measurement	100%	Tech Spec/ Approved Datasheet/ Approved Drawing		TC	√	2	--	1	Only 10% witness by BHEL / BHEL's TPIA, subjective to minimum 1 pump of each size & type.
3.2		Performance test	Critical	Testing	100%			IR	√	2	1	--	
3.3		NPSH test (if NPSHa - NPSHr is < than 1 meter)	Major	Testing	100%			TC	√	2	1	--	
3.4		Submergence test (for vertical pumps)	Major	Testing	100%			TC	√	2	1	--	
3.5		Mechanical run test	Critical	Testing	100%			TC	√	2	1	--	
3.6		Strip Examination	Major	Dismantling	100%								
3.7		Complete unit test	Major	Testing	100%			TC	√	2	1	--	
3.8		Accessories and Spares (if any)	Major	BOM check	100%			IR	√	2	1	--	

LEGEND: P: PERFORM, W: WITNESS, V: VERIFICATION. INDICATE 1 FOR BHEL CQS (OR BHEL NOMINATED INSPECTION AGENCY) & 2 FOR VENDOR/SUB VENDOR AS APPROPRIATE AGAINST EACH COMPONENT /CHARACTERISTIC UNDER P, W & V COLUMNS. * FOR ITEMS MARKED ✓ (TICK) IN COLUMN 'D', TEST CERTIFICATES SHALL BE SUBMITTED TO BHEL FOR RECORDS.

SL NO	COMPONENTS	CHARACTERISTICS	CLASS	TYPE OF CHECK	QUANTUM OF CHECK	REFERENCE DOCUMENT	ACCEPTANCE NORMS	FORMAT OF RECORD	* D	AGENCY P	AGENCY W	AGENCY V	REMARKS
4.0	**PRESERVATION & PACKING**												
4.1	Pump and its components	Direction of rotation, Stamping and Painting	Major	Visual, Shade & DFT	Random	Tech Spec/ Approved Datasheet/ Approved Drawing		IR	√	2	2	--	
4.2		Inspection reports/ certificate traceability index	Major	Visual	100%			Index	√	2	2	--	
4.3		Packing #	Major	Visual	100%			Packing List	√	2	2	--	# Seaworthy packing for export orders

Notes:-

1. This MQP should be read along with specification, approved drawings & approved datasheet. (Latest revisions to be considered as per PO).
2. Specification/Drawing/datasheet shall prevail over quality plan for contradiction if any.
3. Any project/customer specific requirements which shall be notified have to be fulfilled by the vendor at the time of execution of order.
4. PMI to be witness by inspection agency for all accessible SS or AS parts.

Abbreviations:-

MTC	-	Material Test certificate	WPS	-	Welding Procedure Specification
IBR	-	Indian Boiler Regulations	PQR	-	Procedure Qualification Record
DFT	-	Dry Film Thickness	WPQ	-	Welder Performance Qualification
TC	-	Test Certificate	NDE	-	Non Destructive Examination
UTS	-	Ultimate Tensile Strength	Appd. Dwg.	-	Approved Drawing
PMI	-	Positive Material Identification	OD	-	Outer Diameter
G.I	-	Galvanized Iron	ID	-	Internal Diameter
MOC	-	Material of construction			

LEGEND: P: PERFORM, W: WITNESS, V: VERIFICATION. INDICATE 1 FOR BHEL CQS (OR BHEL NOMINATED INSPECTION AGENCY) & 2 FOR VENDOR/SUB VENDOR AS APPROPRIATE AGAINST EACH COMPONENT /CHARACTERISTIC UNDER P, W & V COLUMNS. * FOR ITEMS MARKED ✓ (TICK) IN COLUMN 'D', TEST CERTIFICATES SHALL BE SUBMITTED TO BHEL FOR RECORDS.

	TYPICAL MANUFACTURING QUALITY PLAN	MQP. NO.:	
	PROJECT ENGINEERING & SYSTEMS DIVISION BHEL, RC PURAM, HYD-502032	PROJECT: PACKAGE: LT MOTOR BHEL TECH SPEC:	REV NO: / DATE:
			PAGE 1 OF 4

SL NO	COMPONENTS	CHARACTERISTICS	CLASS	TYPE OF CHECK	QUANTUM OF CHECK	REFERENCE DOCUMENT	ACCEPTANCE NORMS	FORMAT OF RECORD	* D	AGENCY P	AGENCY W	AGENCY V	REMARKS
1.0	**RAW MATERIALS & BOUGHT OUT ITEMS**												
1.1	COPPER WIRE Enameled Copper Wire	Overall diameter, elongation, Mandrel winding test, Peel test, springiness, Abrasion test, Cut through test, Heat shock test, Continuity test	Major	Measurement and mechanical & electrical testing	One sample per heat/lot	National & international standard (IS or IEC) / technical specification/ approved drawing/ datasheet	IR / supplier test certificate	√	2	2	1		
1.2	STEEL SHAFT Straightened Steel bar in black Finish	Dimensions, surface finish, chemical composition	Major	Visual, measurement and chemical testing	One sample per heat/lot		supplier test certificate	√	2	2	1		
1.3		NDT	Major	UT	100%		supplier test certificate	√	2	2	1		
1.4	ALUMINIUM INGOTS	Chemical properties	Major	Chemical testing	One sample per heat/lot		supplier test certificate	√	2	2	1		
2.0	**INPROCESS INSPECTION**												
2.1	ASSEMBLY	Completeness and correctness of assembly	Major	Visual verification	100%	MO and manufacturer's internal processes	Log book	--	2	2	2		

LEGEND: P: PERFORM, W: WITNESS, V: VERIFICATION. INDICATE 1 FOR BHEL CQS (OR BHEL NOMINATED INSPECTION AGENCY) & 2 FOR VENDOR/SUB VENDOR AS APPROPRIATE AGAINST EACH COMPONENT /CHARACTERISTIC UNDER P, W & V COLUMNS. * FOR ITEMS MARKED ✓ (TICK) IN COLUMN 'D', TEST CERTIFICATES SHALL BE SUBMITTED TO BHEL FOR RECORDS.

	TYPICAL MANUFACTURING QUALITY PLAN	MQP. NO.:	
	PROJECT ENGINEERING & SYSTEMS DIVISION BHEL, RC PURAM, HYD-502032	PROJECT: PACKAGE: LT MOTOR BHEL TECH SPEC:	REV NO: / DATE:
			PAGE 2 OF 4

SL NO	COMPONENTS	CHARACTERISTICS	CLASS	TYPE OF CHECK	QUANTUM OF CHECK	REFERENCE DOCUMENT	ACCEPTANCE NORMS	FORMAT OF RECORD	* D	AGENCY P	AGENCY W	AGENCY V	REMARKS
3.0	**FINAL INSPECTION & TESTING**												
3.1	**ROUTINE TESTING**	Measurement of winding resistance in cold condition	Major	Testing	100%	National & international standard (IS or IEC) / technical specification		TC	√	2	1	--	
3.2		SH heater resistance (if applicable)	Major	Testing	100%			TC	√	2	1	--	
3.3		Insulation resistance (before and after HV test)	Major	Testing	100%			TC	√	2	1	--	
3.4		High voltage test at 1.8 KV for 1 minute and space heater HV test	Major	Testing	100%			TC	√	2	1	--	
3.5		Direction of rotation	Major	Testing	100%			TC	√	2	1	--	
3.6		No load test (measurement of NL A, voltage, NL power and NL RPM)	Major	Testing	100%			TC	√	2	1	--	
3.7		Reduced run up voltage test at (rated volt√3)	Major	Testing	100%100%			TC	√	2	1	--	
3.8		Locked rotor test at full load current	Major	Testing	100%			TC	√	2	1	--	
3.9		Vibration measurement	Major	Testing	100%			TC	√	2	1	--	
3.10		Measurement of noise level	Major	Testing	100%			TC	√	2	1	--	
3.11		120% over speed test	Major	Testing	100%			TC	√	2	1	--	

LEGEND: P: PERFORM, W: WITNESS, V: VERIFICATION. INDICATE 1 FOR BHEL CQS (OR BHEL NOMINATED INSPECTION AGENCY) & 2 FOR VENDOR/SUB VENDOR AS APPROPRIATE AGAINST EACH COMPONENT /CHARACTERISTIC UNDER P, W & V COLUMNS. * FOR ITEMS MARKED ✓ (TICK) IN COLUMN 'D', TEST CERTIFICATES SHALL BE SUBMITTED TO BHEL FOR RECORDS.

SL NO	COMPONENTS	CHARACTERISTICS	CLASS	TYPE OF CHECK	QUANTUM OF CHECK	REFERENCE DOCUMENT	ACCEPTANCE NORMS	FORMAT OF RECORD	* D	AGENCY P	AGENCY W	AGENCY V	REMARKS
3.12	**TYPE TESTS**	Measurement of winding resistance in cold condition	Major	Testing	One /rating	National & international standard (IS or IEC) / technical specification		TC	√	2	--	1	Verification of Identical Type test Report of same Rating Identical type test reports for motor ratings (not more than 5 years old) will be provided.
3.13		Temp. rise test at full load (load point for 100%, 75% & 50% load (full load, ¾ and ½ load)	Major	Testing	One /rating			TC	√	2	--	1	
3.14		160% momentary overload test	Major	Testing	One /rating			TC	√	2	--	1	
3.15		Locked rotor amp and torque test	Major	Testing	One /rating			TC	√	2	--	1	
3.16		No load test	Major	Testing	One /rating			TC	√	2	--	1	
3.17		Reduced voltage running up test	Major	Testing	One /rating			TC	√	2	--	1	
3.18		Insulation resistance test (before and after HV test)	Major	Testing	One /rating			TC	√	2	--	1	
3.19		HV test – 1.8 KV for winding and 1.5 KV for space heater	Major	Testing	One /rating			TC	√	2	--	1	
3.20		Vibration test	Major	Testing	One /rating			TC	√	2	--	1	
3.21		120% over speed test	Major	Testing	One /rating			TC	√	2	--	1	

LEGEND: P: PERFORM, W: WITNESS, V: VERIFICATION. INDICATE 1 FOR BHEL CQS (OR BHEL NOMINATED INSPECTION AGENCY) & 2 FOR VENDOR/SUB VENDOR AS APPROPRIATE AGAINST EACH COMPONENT /CHARACTERISTIC UNDER P, W & V COLUMNS. * FOR ITEMS MARKED ✓ (TICK) IN COLUMN 'D', TEST CERTIFICATES SHALL BE SUBMITTED TO BHEL FOR RECORDS.

SL NO	COMPONENTS	CHARACTERISTICS	CLASS	TYPE OF CHECK	QUANTUM OF CHECK	REFERENCE DOCUMENT	ACCEPTANCE NORMS	FORMAT OF RECORD	* D	AGENCY P	AGENCY W	AGENCY V	REMARKS
4.0	**PRESERVATION & PACKING**												
		Painting*, (Shade, DFT,) Marking	Major	Visual, Measurement	Random	Technical specification/ approved drawing/datasheet		TC	√	2	--	1	
		Packing*	Major	Visual	Random			Packing List	√	2	--	--	

Notes:-

1. This MQP should be read along with specification ((Latest revisions to be considered as per PO), approved drawings & approved datasheet.
2. Specification/drawing/datasheet shall prevail over quality plan for contradiction if any.
3. Any project/customer specific requirements which shall be notified have to be fulfilled by the vendor at the time of execution of order.

Abbreviations:-

MTC	–	Material Test certificate	COC	–	Certificate of Compliance	DFT	–	Dry Film Thickness
TC	–	Test Certificate	NDE	–	Non Destructive Examination	IR	–	Inspection Report
DFT	–	Dry Film Thickness	IBR	–	Indian Boiler Regulations	IS	–	Indian Standards

LEGEND: P: PERFORM, W: WITNESS, V: VERIFICATION. INDICATE 1 FOR BHEL CQS (OR BHEL NOMINATED INSPECTION AGENCY) & 2 FOR VENDOR/SUB VENDOR AS APPROPRIATE AGAINST EACH COMPONENT /CHARACTERISTIC UNDER P, W & V COLUMNS. * FOR ITEMS MARKED ✓ (TICK) IN COLUMN 'D', TEST CERTIFICATES SHALL BE SUBMITTED TO BHEL FOR RECORDS.

	TYPICAL MANUFACTURING QUALITY PLAN	MQP. NO.:	
	PROJECT ENGINEERING & SYSTEMS DIVISION BHEL, RC PURAM, HYD-502032	PROJECT: PACKAGE: HT MOTOR (EXCLUDED FROM BIDDER'S SCOPE) BHEL TECH SPEC:	REV NO: DATE: PAGE 1 OF 4

SL NO	COMPONENTS	CHARACTERISTICS	CLASS	TYPE OF CHECK	QUANTUM OF CHECK	REFERENCE DOCUMENT	ACCEPTANCE NORMS	FORMAT OF RECORD	* D	AGENCY P	AGENCY W	AGENCY V	REMARKS
1.0	**RAW MATERIALS & BOUGHT OUT ITEMS**												
1.1	Shaft forging, Magnetic Steel sheet, Stator winding copper, Rotor winding copper	Properties as per Specification/ drawing.	Major	Elec./ Mech./ Chem./ NDT	Sample	Tech Spec/ Approved Datasheet/ Approved Drawing		TC/COC	√	2	2	1	
2.0	**INPROCESS INSPECTIONS**												
2.1	Stator Complete	Measurement of RTD's resistance	Major	Electrical	100%	Tech Spec/ Approved Datasheet/ Approved Drawing		TR	√	2	2	1	
		Inter turn insulation Surge Voltage (Baker) test	Major	Electrical	100%			TR	√	2	2	1	
		HV & IR of stator Winding, Tan delta Test	Major	Electrical	100%			TR	√	2	2	1	>3.3KV, values for information only
2.4	Rotor Complete	HV & IR of rotor winding (For SRIM)	Major	Electrical	100%			TR	√	2	2	1	
		Dynamic Balancing at rated speed	Major	Testing	100%			TR	√	2	2	1	
2.5	Motor Assy.	Dimensional checks (Shaft center height, Key way dimensions, Shaft ext. dimensions)	Major	Measure ment	100%			TR	√	2	2	1	

LEGEND: P: PERFORM, W: WITNESS, V: VERIFICATION. INDICATE 1 FOR BHEL CQS (OR BHEL NOMINATED INSPECTION AGENCY) & 2 FOR VENDOR/SUB VENDOR AS APPROPRIATE AGAINST EACH COMPONENT /CHARACTERISTIC UNDER P, W & V COLUMNS. * FOR ITEMS MARKED ✓ (TICK) IN COLUMN 'D', TEST CERTIFICATES SHALL BE SUBMITTED TO BHEL FOR RECORDS.

	TYPICAL MANUFACTURING QUALITY PLAN	MQP. NO.:	
PROJECT ENGINEERING & SYSTEMS DIVISION BHEL, RC PURAM, HYD-502032	PROJECT: PACKAGE: HT MOTOR (EXCLUDED FROM BIDDER'S SCOPE) BHEL TECH SPEC:	REV NO:	DATE:
		PAGE 2 OF 4	

SL NO	COMPONENTS	CHARACTERISTICS	CLASS	TYPE OF CHECK	QUANTUM OF CHECK	REFERENCE DOCUMENT	ACCEPTANCE NORMS	FORMAT OF RECORD	* D	AGENCY P	AGENCY W	AGENCY V	REMARKS
3.0	**FINAL INSPECTION AND TESTINGS**												
3.1	MOTOR ROUTINE TESTS	Verification of DOR, Name plate, Terminal box location, Phase sequence	Major	Electrical	100%	Tech Spec/ Approved Datasheet/ Approved Drawing		TR	√	2	1	--	
3.2		Measurement of stator winding resistance	Major	Electrical	100%			TR	√	2	1	--	
3.3		Insulation Resistance Test before & after HV Test	Major	Electrical	100%			TR	√	2	1	--	
3.4		High Voltage Test	Major	Electrical	100%			TR	√	2	1	--	
3.5		Polarization Index	Major	Electrical	100%			TR	√	2	1	--	
3.6		No Load running of Motor & Measurement of Current ,Voltage, Power Input & Speed	Major	Electrical	100%			TR	√	2	1	--	
3.7		Functional testing of Accessories and auxiliaries (RTD, BTD, Space heater)	Major	Electrical	100%			TR	√	2	1	--	
3.8		Reduced voltage running up test	Major	Electrical	100%			TR	√	2	1	--	

LEGEND: P: PERFORM, W: WITNESS, V: VERIFICATION. INDICATE 1 FOR BHEL CQS (OR BHEL NOMINATED INSPECTION AGENCY) & 2 FOR VENDOR/SUB VENDOR AS APPROPRIATE AGAINST EACH COMPONENT /CHARACTERISTIC UNDER P, W & V COLUMNS. * FOR ITEMS MARKED ✓ (TICK) IN COLUMN 'D', TEST CERTIFICATES SHALL BE SUBMITTED TO BHEL FOR RECORDS.

	TYPICAL MANUFACTURING QUALITY PLAN	MQP. NO.:	
PROJECT ENGINEERING & SYSTEMS DIVISION BHEL, RC PURAM, HYD-502032	PROJECT: PACKAGE: HT MOTOR (EXCLUDED FROM BIDDER'S SCOPE) BHEL TECH SPEC:	REV NO:	DATE:
		PAGE 3 OF 4	

SL NO	COMPONENTS	CHARACTERISTICS	CLASS	TYPE OF CHECK	QUANTUM OF CHECK	REFERENCE DOCUMENT	ACCEPTANCE NORMS	FORMAT OF RECORD	* D	AGENCY P	AGENCY W	AGENCY V	REMARKS
3.9		Open CKT. Voltage test (For SRIM only)	Major	Electrical	100%	Tech Spec/ Approved Datasheet/ Approved Drawing		. TR	√	2	1	--	
3.10		Vibration Test During no load run	Major	Electrical	100%			TR	√	2	1	--	
3.11		Shaft Voltage Measurement during No Load Run	Major	Electrical	100%			TR	√	2	1	--	APPLICABLE FOR HORIZONTAL MOTORS
3.12	MOTOR TYPE TEST	All test covered in routine test	Major	Electrical	1 Motor			TR	√	2	2	1	
3.13		Full load measurement Of voltage, current & Power input , Slip	Major	Electrical	1 Motor			TR	√	2	2	1	
3.14		PF at 50%,75% & 100%	Major	Electrical	1 Motor			TR	√	2	2	1	
3.15		Over Speed Test during No load run	Major	Electrical	1 Motor			TR	√	2	2	1	
3.16		Temperature rise test	Major	Electrical	1 Motor			TR	√	2	2	1	
3.17		Calculation of efficiency (by summation of loss method) at ½.3/4, & full load	Major	Electrical	1 Motor			TR	√	2	2	1	
3.18		Noise Measurement during No Load Run	Major	Electrical	1 Motor	Tech Spec/ Approved Datasheet/ Approved Drawing		. TR	√	2	2	1	
3.19		Momentary over load test	Major	Electrical	1 Motor			TR	√	2	2	1	

LEGEND: P: PERFORM, W: WITNESS, V: VERIFICATION. INDICATE 1 FOR BHEL CQS (OR BHEL NOMINATED INSPECTION AGENCY) & 2 FOR VENDOR/SUB VENDOR AS APPROPRIATE AGAINST EACH COMPONENT /CHARACTERISTIC UNDER P, W & V COLUMNS. * FOR ITEMS MARKED ✓ (TICK) IN COLUMN 'D', TEST CERTIFICATES SHALL BE SUBMITTED TO BHEL FOR RECORDS.

SL NO	COMPONENTS	CHARACTERISTICS	CLASS	TYPE OF CHECK	QUANTUM OF CHECK	REFERENCE DOCUMENT	ACCEPTANCE NORMS	FORMAT OF RECORD	* D	AGENCY P	AGENCY W	AGENCY V	REMARKS
3.20		Starting torque, starting current, and pullout torque calculation	Major	Electrical	1 Motor			TR	√	2	2	1	Based on no load reading
4.0	**PRESERVATIONS AND PACKING**												
4.1		Check for Painting (Paint shade & thickness)	Major	Visual, DFT	100%	Tech Spec/ Approved Datasheet/ Approved Drawing		IR	√	2	2	1	
4.2		Check for fitment of all components & accessories	Major	Visual	100%			IR	-	2	2	1	

Notes:-

1. This MQP should be read along with specification (latest revision), approved drawings & approved data sheet.
2. Specifications/drawing/data sheet shall prevail over quality plan for contradiction if any between quality plan and drawing/specification.
3. All test certificates/reports reviewed and certified by TPI/BHEL shall be submitted to BHEL as documentation package.
4. Any project/customer specific requirements which shall be notified have to be fulfilled by the vendor at the time of execution of order.

ABBREVIATIONS:-

BDV: Break Down Voltage	IP: Ingress Protection	CIMFR: Central Institute of Mining & Fuel Research
OD: Outer Diameter	HV: High Voltage	DGMS: Directorate General of Mines Safety
ID: Internal Diameter	TC: Test Certificate	CCOE: Chief Controller of Explosives
BIS: Bureau of Indian Standards	CPRI: Central Power Research Institute	PESO: Petroleum and Explosives Safety Organization

LEGEND: P: PERFORM, W: WITNESS, V: VERIFICATION. INDICATE 1 FOR BHEL CQS (OR BHEL NOMINATED INSPECTION AGENCY) & 2 FOR VENDOR/SUB VENDOR AS APPROPRIATE AGAINST EACH COMPONENT /CHARACTERISTIC UNDER P, W & V COLUMNS. * FOR ITEMS MARKED ✓ (TICK) IN COLUMN 'D', TEST CERTIFICATES SHALL BE SUBMITTED TO BHEL FOR RECORDS.

	TYPICAL MANUFACTURING QUALITY PLAN	MQP. NO.:	
	PROJECT ENGINEERING & SYSTEMS DIVISION BHEL, RC PURAM, HYD-502032	PROJECT: PACKAGE: DIESEL ENGINE BHEL TECH SPEC:	REV NO: / DATE:
			PAGE 1 OF 3

SL NO	COMPONENTS	CHARACTERISTICS	CLASS	TYPE OF CHECK	QUANTUM OF CHECK	REFERENCE DOCUMENT	ACCEPTANCE NORMS	FORMAT OF RECORD	* D	AGENCY P	AGENCY W	AGENCY V	REMARKS
1.0	**RAW MATERIALS & BOUGHT OUT ITEMS**												
1.1	Piston crown, Connecting rod, Crankshaft, Camshaft	Chem. & mech. properties	Major	Chem. & mech. Testing	1 per lot/heat	Tech Spec/ Approved Datasheet/ Approved Drawing		MTC	√	2	2	1	
1.2		Crack test	Major	NDE	100%			MTC	√	2	2	1	
1.3		Dimensions	Major	Measure ment	100%			MTC	√	2	2	1	
1.4	Cylinder block, Cylinder head, Cylinder liner	Chem. & mech. properties	Major	Chem. & mech. Testing	1 per lot/heat			MTC	√	2	2	1	
1.5		Pressure test	Major	Hydro test	100%			MTC	√	2	2	1	
1.6		Dimensions	Major	Measure ment	100%			MTC	√	2	2	1	
2.0	**INPROCESS INSPECTION**												
2.1	Crankshaft	Dynamic balancing	Critical	balancing	100%	Tech Spec/ Approved Datasheet/ Approved Drawing		IR	√	2	2	1	
2.2	Fuel pump, Lube oil pump and control panel	Functional test	Major	Testing	100%			TC	√	2	2	1	Bidder may submit separate QAP for Panel.

LEGEND: P: PERFORM, W: WITNESS, V: VERIFICATION. INDICATE 1 FOR BHEL CQS (OR BHEL NOMINATED INSPECTION AGENCY) & 2 FOR VENDOR/SUB VENDOR AS APPROPRIATE AGAINST EACH COMPONENT /CHARACTERISTIC UNDER P, W & V COLUMNS. * FOR ITEMS MARKED ✓ (TICK) IN COLUMN 'D', TEST CERTIFICATES SHALL BE SUBMITTED TO BHEL FOR RECORDS.

SL NO	COMPONENTS	CHARACTERISTICS	CLASS	TYPE OF CHECK	QUANTUM OF CHECK	REFERENCE DOCUMENT	ACCEPTANCE NORMS	FORMAT OF RECORD	* D	AGENCY P	AGENCY W	AGENCY V	REMARKS
3.0	**FINAL INSPECTION & TESTING**												
3.1	Diesel engine	Performance test	Critical	Testing	100%	Tech Spec/ Approved Datasheet/ Approved Drawing		TC	√	2	1	--	Only 10% witness by BHEL / BHEL's TPIA, subjective to minimum 1 engine of each size & type.
3.2		Overall Dimensions	Major	Measure ment	100%			IR	√	2	1	--	
3.3		Spares (if any)	Major	BOM check	100%			IR	√	2	1	--	
4.0	**PRESERVATION & PACKING**												
4.1	Diesel engine and its components	Stamping and Painting	Major	Visual, Shade & DFT	Random	Tech Spec/ Approved Datasheet/ Approved Drawing		IR	√	2	2	--	
4.2		Packing #	Major	Visual	100%			Packing List	√	2	2	1	# Seaworthy packing for export orders

Notes:-

4. This MQP should be read along with specification ((Latest revisions to be considered as per PO), approved drawings & approved datasheet.
5. Specification/drawing/datasheet shall prevail over quality plan for contradiction if any.
6. Any project/customer specific requirements which shall be notified have to be fulfilled by the vendor at the time of execution of order.

Abbreviations:-

MTC	–	Material Test certificate	COC	–	Certificate of Compliance	DFT	–	Dry Film Thickness
TC	–	Test Certificate	NDE	–	Non Destructive Examination	IR	–	Inspection Report
DFT	–	Dry Film Thickness	IBR	–	Indian Boiler Regulations	IS	–	Indian Standards

LEGEND: P: PERFORM, W: WITNESS, V: VERIFICATION. INDICATE 1 FOR BHEL CQS (OR BHEL NOMINATED INSPECTION AGENCY) & 2 FOR VENDOR/SUB VENDOR AS APPROPRIATE AGAINST EACH COMPONENT /CHARACTERISTIC UNDER P, W & V COLUMNS. * FOR ITEMS MARKED ✓ (TICK) IN COLUMN 'D', TEST CERTIFICATES SHALL BE SUBMITTED TO BHEL FOR RECORDS.

भारत हेवी इलेक्ट्रिकल्स लिमिटेड

BHARAT HEAVY ELECTRICALS LIMITED

रामचन्द्रापुरम हैदराबाद - 32

RAMACHANDRAPURAM: HYDERABAD - 502 032.

परियोजना इंजीनियरिंग विभाग

PROJECT ENGINEERING & SYSTEMS DIVISION

परियोजना / PROJECT : **2 X 660 MW TANGEDCO UDANGUDI STPP, STAGE-1**

विषय / SUB : **PQC format**

The bidder shall be an established manufacturer of Horizontal Centrifugal design pumps for Fire Protection System & having adequate engineering, manufacturing & testing facilities for pumps confirming to the relevant HIS, IS-5120, IS-1710, IS-6595 Part-2/Equivalent Standard & Comply with the regulations of Tariff Advisory Committee (TAC)/LPA India or Oil industry safety directorate (OISD) or any other International reputed authority (like LPC-UK or NFPA, USA). The pump model offered shall be from the existing regular manufacturing range of bidder.

The offered pump model shall meet the minimum service & manufacturing experience specified as below: Bidder should have engineered, manufactured, tested, supplied and commissioned at least SIX (06) nos. of identical or similar packages (or higher capacity packages) in terms of Flow, Differential Pressure, Material of construction(CS/CI/SS), speed in the last Ten years and at least Three (3) of these pumps shall have supplied and commissioned and kept in trouble free operations for the past 5 years as on 31st Jan 2018. Vendor to give documentary evidence for the same. **As a proof for the same, Date of Supply/ Commissioning report/Customer Satisfaction report will be considered and same to be provided by Bidder for each Model of Pump Separately for Hydrant-Spray, Booster and Jockey Pumps**

Bidders shall furnish the details as per the below mentioned table along with technical offer for assessment of Bidder with reference to PQC indicated as above.

S.no	Name of Customer	Service	Quantity	Flow (M3/HR)	Differential Head(MLC)	Speed (RPM)	Material of construction	Order ref no & date (copy to be enclosed)	Performance certificate/ Inspection Report/ Dispatch Clearance to be enclosed	Remarks

Annexure-9 Sub Vendor List

	Item	Vendor Name
	Vendor Name	
1	LIQUID LEVEL GAUGES	**AS PER CUSTOMER APPROVED LIST PROVIDED BELOW**
2	PRESSURE GAUGES	**AS PER CUSTOMER APPROVED LIST PROVIDED BELOW**
3	TEMPERATURE TRANSMITTER	EMERSON PROCESS MGT (I) PVT LTD
		ABB INDIA LIMITED, HYD
		YOKOGAWA INDIA LIMITED
		HONEYWELL AUTOMATION INDIA LIMITED
4	RESISTANCE TEMPERATURE DETECTORS (RTD & THERMOCOUPLES)	PROTECH CONTROL INSTRUMENTS
		TOSHNIWAL INDUSTRIES PVT. LTD.
		TEMPSENS INSTRUMENTS (I) PVT.LTD.
		THERMAL INSTRUMENT INDIA
		GAUGES BOURDON INDIA PVT. LTD.
		EXOTHERM INSTRUMENTS
		DETRIV INSTRUMENTATION
		BAUMER TECHNOLOGIES
		PRECISION MASS PRODUCTS PVT LTD
		PYRO ELECTRIC INSTRUMENTS GOA
		ALTOP INDUSTRIES LIMITED
5	LIQUID LEVEL FLOAT SWITCH	**AS PER CUSTOMER APPROVED LIST PROVIDED BELOW**
6	PRESSURE TRANSMITTER	**AS PER CUSTOMER APPROVED LIST PROVIDED BELOW**
7	INSTRUMENT HOOK UP MATERIAL PACKAGE	Vipal Enterprises Pvt.Ltd.
		NAV DURGA FORGING AND FITTINGS
		SWASTIK ENGINEERING WORKS
		PANAM ENGINEERS PVT. LTD.
		DYNAFLUID VALVES AND FLOW CONTROLS
		P.K. TUBES & FITTINGS PVT. LTD.
		TRUE FAB ENGINEER (P) LTD.
		TRUE FORGE PVT.LTD.,
		CARLO DYNATECH INDUSTRIES,
		PRESHZINGER ENGINEERING
		UNIQUE ENGINEERING ENTPS. PVT. LTD.
		KWALITY FORGED FITTINGS
8	GASKETS	**AS PER CUSTOMER APPROVED LIST PROVIDED BELOW**
9	FLANGES	**AS PER CUSTOMER APPROVED LIST PROVIDED BELOW**
10	BATTERY CHARGER	AMARA RAJA POWER SYSTEMS LTD
		VERTIV ENERGY PRIVATE LIMITED
		HBL POWER SYSTEMS LTD
		HITACHI HI-REL POWER
		SERVILINK ENGINEERS PVT. LTD.
		KERALA STATE ELECTRONICS
		DUBAS ENGINEERING PVT LTD.
		CHHABI ELECTRICALS P LTD.
		MASS-TECH CONTROLS PVT. LTD.
		STATCON ENERGIAA PVT LTD.
		CHLORIDE POWER SYSTEMS &
11	LT MOTORS (SAFE AREA)	SIEMENS INDIA LTD SECBAD.
		ABB INDIA LIMITED, HYD
		KIRLOSKAR ELEC.CO.LTD
		LAXMI HYDRAULICS PVT. LTD.
		BHARAT BIJLEE LTD, MUMBAI
		CROMPTON GREAVES
12	LEAD ACID STORAGE BATTERY	EXIDE INDUSTRIES LIMITED
		HBL POWER SYSTEMS LTD
		HOPPECKE BATTERIEN GMBH & CO KG
13	DIESEL ENGINE(REFER NOTE-1)	GREAVES COTTON, PUNE
		CUMMINS, KOTHRUD/VIMAN NAGAR
		CATERPILLAR/USA
		ASHOKLEYLAND, CHENNAI
		KOEL, PUNE
14	LOCAL CONTROL PANEL FOR DIESEL ENGINE(REFER NOTE-1)	JASPER, GURGOAN
		KMG A TOZ, NOIDA
		C&S, NOIDA/HARIDWAR
		ICA, MUMBAI
		ISC, MUMBAI
		PYROTECH, UDAIPUR
		ANAND CONTROL, NOIDA
		VIDUT CONTROL, GHAZIABAD
		VENUS, MUMBAI
		ACHUYUT
15	CABLE GLANDS (WEATHER PROOF/EX.PROOF)	BRACO ELECTRICALS INDIA PVT. LTD
		ELECTROMAC INDUSTRIES
		FCG FLAMEPROOF CONTROL GEARS
		FLAMEPROOF EQUIPMENTS PVT.LTD.
		PROMPT ENGINEERING WORKS, MUMBAI
		FCG POWER INDUSTRIES
		FLEXPRO ELECTRICALS PVT. LTD.,
		UNITED AGRO ENGINEERING PVT. LTD.
16	CABLE LUGS & CRIMPING TOOLS	FORWARD ENGINEERING INDUSTRIES
		BRACO ELECTRICALS INDIA PVT. LTD
		ELECTROMAC INDUSTRIES
		CHETNA ENGINEERING CO.
		AUTOMIC ELECTRIC & REFRIGERATION CO

NOTES:

1. The sub-vendors indicated are minimum. However bidder may follow any other reputed vendors with due approval of purchaser by submitting their credentials.

2. In case of any specific practical difficulty, bidder is requested to bring out the same with proper reason for not following vendor list. For other items for which sub vendors are not specified, bidder can follow their standard vendors.

However, they have to ensure the Proven Track record of the sub vendors and Bidder to take prior approval of BHEL for the same.

Tamil Nadu Generation and Distribution Company Limited.
(Udangudi Project)

From

Er. U.S.PONGIANNAN,B.E.,
Chief Engineer /Projects-II ,
TANGEDCO,
1st Floor,New EB Quarters
144,Anna salai
Chennai-600 002.
Email- secutpp@tnebnet.org

To

BHEL, PS-PEM,
Power Projects Engineering Institute (PPEI Building),
HRDI & ESI Complex, Plot No. 25, Sector-16A,
Noida-201301 (U.P.)
Email: permindersingh@bhel.in
pedm@bhel.in

Lr. No. CE/PROJ/SE/C/UP/EE/M/ AEE/M/Engineering/ D.599/2018,dt.17.12.2018.

Sir,

Sub.: TANGEDCO-Udangudi 2x660 MW Super Critical Thermal Power Project Stage-I-Vendor Approval for BHEL_PESD-New vendor approval for Fire Protection system-Regarding.

Ref.: Your letter ref. No. PESD/CM/UDANGUDI/CM LTR-01, dt.09.11.2018.

<<<O>>>

With reference to your letter cited above, the following new vendor approval is accorded for Fire Protection System.

Sl No	Items Description	Name of Vendor	Remarks on Vendor Approval
1	HYDRANT VALVE	ASHOKA ENGINEERING COMPANY	Approved
		SHAH BHOGILAL JETHALAL & BROTHERS	Approved
		NEWAGE FIRE FIGHTING CO. LTD.	Approved
		SUKAN EQUIPMENTS	Approved
		ASCO STRUMECH PVT. LTD.	Not Approved, since no Experience with vendor
2	WATER MONITOR	FIRETECH EQUIPMENT & SYSTEMS	Approved
		HD FIRE PROTECT PVT. LTD.	Approved
		NEWAGE FIRE FIGHTING CO. LTD.	Approved
		SHAH BHOGILAL JETHALAL & BROTHERS	Approved
		VIMAL FIRE CONTROLS PVT. LTD.	Not Approved, since no Experience with vendor
		ASHOKA ENGINEERING COMPANY	Approved
3	HOSE BOX	ASHOKA ENGINEERING COMPANY	Approved
		SHAH BHOGILAL JETHALAL & BROTHERS	Approved
		NEWAGE FIRE FIGHTING CO. LTD.	Approved
		ASCO STRUMECH PVT. LTD.	Not Approved, since no Experience with vendor

Sl No	Items Description	Name of Vendor	Remarks on Vendor Approval
4	FIRE HOSE WITH COUPLING	ASCO STRUMECH PVT. LTD.	Not Approved, since no Experience with vendor
		NEWAGE FIRE FIGHTING CO. LTD.	Approved
		SHAH BHOGILAL JETHALAL & BROTHERS	Approved
		CHHATARIYA FIRETECH INDUSTRIES LTD.	Approved
		ASHOKA ENGINEERING COMPANY	Approved
5	HOSE REEL	NEWAGE FIRE FIGHTING CO. LTD.	Approved
6	BRANCH PIPE WITH NOZZLE	ASHOKA ENGINEERING COMPANY	Approved
		SHAH BHOGILAL JETHALAL & BROTHERS	Approved
		ASCO STRUMECH PVT. LTD.	Not Approved, since no Experience with vendor
7	GUN METAL VALVE	A.V.VALVES LIMITED	Approved
		AMPO VALVES INDIA PRIVATE LIMITED	Not Approved, since no Experience with vendor
		LEADER VALVES LIMITED	Approved
		VALVE TECH INDUSTRIES	Not Approved, since no Experience with vendor
		STEEL STRONG VALVES (I) PVT. LTD.	Approved
		SHALIMAR VALVES PVT. LTD.	Not Approved, since no Experience with vendor
		SKILT FABRICATORS PVT.LTD.	Not Approved, since no Experience with vendor
		NITON VALVE INDUSTRIES LTD.	Approved
		MICON VALVES (I) PVT. LTD.	Not Approved, since no Experience with vendor
		NSSL LIMITED	Not Approved, since no Experience with vendor
		WEIR BDK VALVES	Approved
		B.F.E.SRL BONNEY FORGE	Not Approved, since no Experience with vendor
		VALVITALIA S.P.A	Not Approved, since no Experience with vendor
		FLOSTEER ENGINEERS PVT. LTD.	Not Approved, since no Experience with vendor
		OSWAL INDUSTRIES LTD.	Approved
		L & T VALVES LIMITED	Approved
		FOURESS ENGINEERING (I)PVT.LTD.	Approved
8	AIR RELEASE VALVE	KALPANA VALVES MFG. CO. PVT. LTD.	Not Approved, since no Experience with vendor
		KAMALA VALVES & ENGINEERING PVT. LT	Approved
		JUPITER ENGINEERING CO.	Not Approved, since no Experience with vendor
		BHARATMATA ENGINEERING WORKS	Not Approved, since no Experience with vendor
		A.V.VALVES LIMITED	Approved

Sl No	Items Description	Name of Vendor	Remarks on Vendor Approval
		DURGA VALVES PRIVATE LIMITED	Approved
9	PRESSURE TRANSMITTER	EMERSON PROCESS MGT (I) PVT LTD.	Approved
		ABB INDIA LIMITED, HYD	Approved
		YOKOGAWA INDIA LIMITED	Approved
		ENDRESS + HAUSER (INDIA) PVT. LTD.	Approved
		HONEYWELL AUTOMATION INDIA LIMITED	Approved
10	AIR COMPRESSOR	INGERSOLL RAND (INDIA) LTD.	Approved
		ELGI EQUIPMENTS LIMITED	Approved
		AIROSPARES & EQUIPMENTS,	Not Approved, since no Experience with vendor
		ATLAS COPCO INDIA LTD.	Approved
		KIRLOSKAR PNEUMATIC COMPANY LIMITED	Approved
		ELGI SAURE COMPRESSORS LTD.	Not Approved, since no Experience with vendor
11	HYDRO-PNEUMATIC TANK	THERMOSYSTEMS PRIVATE LIMITED.	Approved
		EXCEL INDUSTRIES,	Approved
		RUKSAN ENGINEERS PVT.LTD.	Approved
		P S A NITROGEN LIMITED.	Approved
		BARODA EQUIPMENT AND VESSELS	Approved
		GRAND PRIX ENGINEERING PVT. LTD	Approved
		FABTECH PROJECTS & ENGINEERS LTD.	Approved
		RAVI INDUSTRIES	Approved
		MAHATHI INFRA SERVICES PVT LTD	Not Approved, since no Experience with vendor
12	LEVEL SWITCH	EMERSON PROCESS MGT (I) PVT LTD	Approved
		ENDRESS + HAUSER (INDIA) PVT. LTD.	Approved
		PUNE TECHTROL PVT LTD	Approved
		HONEYWELL AUTOMATION INDIA LIMITED	Not Approved, since no Experience with vendor
		VEGA INDIA LEVEL & PRESSURE	Approved
13	PRESSURE GAUGE	PROTECH CONTROL INSTRUMENTS	Not Approved, since no Experience with vendor
		A.N. INSTRUMENTS PVT. LTD.,	Approved
		GAUGES BOURDON INDIA PVT. LTD.	Approved
		BAUMER TECHNOLOGIES	Approved
		SCIENTIFIC DEVICES (BOMBAY) PVT. LTD	Not Approved, since no Experience with vendor
		WALCHANDNAGAR INDUSTRIES LIMITED	Not Approved, since no Experience with vendor
		H.GURU INSTRUMENTS(S.I)PVT.LTD	Approved
		PRECISION MASS PRODUCTS PVT LTD	Approved
		GOA INSTRUMENTS INDUSTRIES PVT. LTD.	Approved

Sl No	Items Description	Name of Vendor	Remarks on Vendor Approval
		FORBES MARSHALL (HYD) PVT LIMITED	Approved
14	LEVEL GAUGE	D.K.INSTRUMENTS (P) LTD.	Approved
		LEVCON INSTRUMENTS (P) LTD	Approved
		GAUGES BOURDON INDIA PVT. LTD.	Approved
		NISAN SCIENTIFIC PROCESS	Not Approved, since no Experience with vendor
		PUNE TECHTROL PVT LTD.	Approved
		CHEMTROLS INDUSTRIES PVT LTD.	Approved
		PRATOLINA INSTRUMENTS PVT.LTD.	Not Approved, since no Experience with vendor
		SCIENTIFIC DEVICES (BOMBAY) PVT. LTD.	Not Approved, since no Experience with vendor
		BLISS ANAND PVT. LTD.	Approved
		IGEMA GmbH	Approved
		V AUTOMAT AND INSTRUMENTS PVT LTD.	Approved
15	DELUGE VALVE	DE'S TECHNICO LIMITED	Approved
		DARLING MUESCO (INDIA) PVT. LTD.	Approved
		NAFFCO	Approved
		HD FIRE PROTECT PVT. LTD.	Approved
16	SPRAY NOZZLE	SHAH BHOGILAL JETHALAL & BROTHERS	Approved
		NEWAGE FIRE FIGHTING CO. LTD.	Approved
		HD FIRE PROTECT PVT. LTD.	Approved
		FIRETECH EQUIPMENT & SYSTEMS	Approved
		ASCO STRUMECH PVT. LTD.	Not Approved, since no Experience with vendor
17	QUARTZOID BULB DETECTOR	NEWAGE FIRE FIGHTING CO. LTD.	Approved
		HD FIRE PROTECT PVT. LTD.	Approved
18	PRESSURE SWITCHES	SWITZER PROCESS INSTRUMENTS	Approved
		GAUGES BOURDON INDIA PVT. LTD.	Approved
		KAUSTUBHA UDYOG	Not Approved, since no Experience with vendor
		HIRLEKAR PRECISION ENGG. PVT. LTD.	Not Approved, since no Experience with vendor
		BAUMER TECHNOLOGIES	Approved
		TRAFAG CONTROLS INDIA PVT LTD.	Approved
		PRECISION MASS PRODUCTS PVT LTD.	Approved
19	FOAM BRANCH PIPE	ASHOKA ENGINEERING COMPANY	Approved
		SHAH BHOGILAL JETHALAL & BROTHERS	Approved
		ASCO STRUMECH PVT. LTD.	Not Approved, since no Experience with vendor
20	INLINE BALANCE PROPORTIONER	SHAH BHOGILAL JETHALAL & BROTHERS	Approved
		HD FIRE PROTECT PVT. LTD.	Approved
		FIRETECH EQUIPMENT & SYSTEMS	Approved

Sl No	Items Description	Name of Vendor	Remarks on Vendor Approval
21	FOAM TANK	HD FIRE PROTECT PVT. LTD.	Approved
		FIRETECH EQUIPMENT & SYSTEMS	Approved
22	FOAM PUMP & AUXILIARIES	DEL PD PUMPS AND GEAR PVT. LTD.	Approved
23	FIRE WATER PUMPS & AUXILIARIES	WPIL LIMITED	Approved
		FLOWMORE LIMITED	Approved
		JYOTI LIMITED	Approved
		WILO MATHER AND PLATT PUMPS	Approved
		KIRLOSKAR BROTHERS LTD.	Approved
		REVOLVE ENGINEERS (OEM: GRUNDFOS)	Not Approved, since no Experience with vendor
24	INERT GAS SYSTEM PACKAGE	TECHNICO (INDIA) PVT. LTD.	Not Approved, since no Experience with vendor
		DE S TECHNICO PRIVATE LIMITED	Not Approved, since no Experience with vendor
		AGNICE FIRE PROTECTION PVT. LTD.	Approved
		HITEK ENGINEERING SERVICES	Not Approved, since no Experience with vendor
		STERLING AND WILSON PVT LTD.	Approved
		MX SYSTEMS INTERNATIONAL PVT. LTD.	Approved
		NITIN FIRE PROTECTION INDUSTRIES LTD.	Approved
		UTC FIRE & SECURITY INDIA LIMITED.	Not Approved, since no Experience with vendor
		NEW FIRE ENGRS. PVT. LTD.	Approved
		TYCO FIRE & SECURITY INDIA PVT. LTD.	Approved
		FIREPRO SYSTEMS PVT. LTD.	Not Approved, since no Experience with vendor
		NOHMI BOSAI (INDIA) PVT. LTD.	Not Approved, since no Experience with vendor
		MEHTA & ASSOCIATES FIRE PROTECTION	Approved
		CONSILIUM MIDDLE EAST (FZC)	Not Approved, since no Experience with vendor
		LLOYD INSULATIONS (INDIA) LTD.	Approved
		THERMOSYSTEMS PRIVATE LIMITED.	Approved
25	PORTABLE EXTINGUISHER	TECHNICO (INDIA) PVT. LTD.	Not Approved, since no Experience with vendor
		INTEGRATED FIRE PROTECTION	Not Approved, since no Experience with vendor
		DE S TECHNICO PRIVATE LIMITED	Not Approved, since no Experience with vendor
		AGNICE FIRE PROTECTION PVT. LTD.	Approved
		SAFEX FIRE SERVICES LTD.	Approved
		KANADIA FYR FYTER PVT. LTD.	Approved
		HITEK ENGINEERING SERVICES	Approved
		INTIME FIRE APPLIANCES PVT. LTD.	Approved

Sl No	Items Description	Name of Vendor	Remarks on Vendor Approval
	PORTABLE EXTINGUISHER	SUPREMEX EQUIPMENTS	Not Approved, since no Experience with vendor
		MX SYSTEMS INTERNATIONAL PVT. LTD.	Not Approved, since no Experience with vendor
		NITIN FIRE PROTECTION INDUSTRIES LTD.	Not Approved, since no Experience with vendor
		NEW FIRE ENGRS. PVT. LTD.	Approved
		TYCO FIRE & SECURITY INDIA PVT. LTD.	Approved
		FIREPRO SYSTEMS PVT. LTD.	Not Approved, since no Experience with vendor
		MEHTA & ASSOCIATES FIRE PROTECTION	Approved
		ASHOKA ENGINEERING COMPANY	Approved
		UNITED FIRE EQUIPMENTS PVT LTD.	Not Approved, since no Experience with vendor
		CONSILIUM MIDDLE EAST (FZC)	Not Approved, since no Experience with vendor
		THERMOSYSTEMS PRIVATE LIMITED.	Approved
26	FIRE WATER PIPES	GAJANAN TUBES PRIVATE LIMITED	Approved
		UTKARSH INDIA LIMITED	Not Approved, since no Experience with vendor
		NEZONE TUBES LIMITED	Not Approved, since no Experience with vendor
		APL APOLLO TUBES LIMITED	Approved
		DADU PIPES PVT. LTD.	Approved
		BHARAT TUBES CORPORATION	Not Approved, since no Experience with vendor
		STEEL AUTHORITY OF INDIA LIMITED	Approved
		M K K METAL SECTIONS PVT. LTD.	Not Approved, since no Experience with vendor
		MADRAS STEEL AND TUBES	Not Approved, since no Experience with vendor
		TUBES INDIA	Not Approved, since no Experience with vendor
		MOKSHI INDUSTRIES PVT. LTD.	Not Approved, since no Experience with vendor
		MAHARASHTRA SEAMLESS LTD.,	Approved
		SURYA ROSHNI LIMITED	Approved
		JINDAL PIPES LIMITED	Approved
		SWASTIK PIPE LIMITED	Not Approved, since no Experience with vendor
		NAVRATAN PIPE AND PROFILE LIMITED	Not Approved, since no Experience with vendor
		INDUS TUBES LIMITED	Approved
		FUTNANI STEELS PVT LTD.	Not Approved, since no Experience with vendor
27	BUTTERFLY VALVES	KALPANA VALVES MFG. CO. PVT. LTD.	Not Approved, since no Experience with vendor

Sl No	Items Description	Name of Vendor	Remarks on Vendor Approval
	BUTTERFLY VALVES	VENUS PUMP & ENGINEERING WORKS	Not Approved, since no Experience with vendor
		KAMALA VALVES & ENGINEERING PVT. LTD.	Not Approved, since no Experience with vendor
		JUPITER ENGINEERING CO.	Not Approved, since no Experience with vendor
		ADVANCE VALVES PVT.LTD.	Approved
		A.V.VALVES LIMITED	Approved
		STAFFORD CONTROLS LIMITED	Approved
		CANLE VALVES PRIVATE LIMITED	Not Approved, since no Experience with vendor
		DELVAL FLOW CONTROLS PVT LTD.	Not Approved, since no Experience with vendor
		GALAXY CONTROLS PVT LTD.	Not Approved, since no Experience with vendor
		LEADER VALVES LIMITED	Not Approved, since no Experience with vendor
		HI-TECH BUTTERFLY VALVES INDIA	Not Approved, since no Experience with vendor
		R & D MULTIPLES (METAL CAST)	Approved
		CRANE PROCESS FLOW TECHNOLOGIES	Approved
		VALVE TECH INDUSTRIES	Not Approved, since no Experience with vendor
		DURGA VALVES PRIVATE LIMITED	Not Approved, since no Experience with vendor
		L & T VALVES LIMITED	Approved
		ASHWATHI CONTROLS PVT. LTD.	Not Approved, since no Experience with vendor
		BRAY CONTROLS INDIA PRIVATE LIMITED	Not Approved, since no Experience with vendor
		DINTECH VALVES PVT. LTD.	Not Approved, since no Experience with vendor
		SAP INDUSTRIES LIMITED	Not Approved, since no Experience with vendor
		ORTON S.R.L.	Not Approved, since no Experience with vendor
		INSTRUMENTATION LTD.	Not Approved, since no Experience with vendor
		WEIR BDK VALVES	Approved
		HAWA VALVES (INDIA) PVT. LTD.	Not Approved, since no Experience with vendor
		UNIQUE VALVES LIMITED	Not Approved, since no Experience with vendor
		INTERVALVE POONAWALLA LIMITED	Not Approved, since no Experience with vendor
		DEMBLA VALVES LTD.	Not Approved, since no Experience with vendor

Sl No	Items Description	Name of Vendor	Remarks on Vendor Approval
	BUTTERFLY VALVES	ROTEX MANUFACTURERS & ENGINEERS	Not Approved, since no Experience with vendor
		DYNAMIC VALVES PVT. LTD.	Not Approved, since no Experience with vendor
28	CAST IRON VALVES-GATE(SLUICE)&CHECK	KAMALA VALVES MANUFACTURING CONCERN	Not Approved, since no Experience with vendor
		KALPANA VALVES MFG. CO. PVT. LTD.	Not Approved, since no Experience with vendor
		H.SARKER & COMPANY	Approved
		G.M. DALUI AND SONS PVT. LTD.	Not Approved, since no Experience with vendor
		VENUS PUMP & ENGINEERING WORKS	Not Approved, since no Experience with vendor
		KAMALA VALVES & ENGINEERING PVT. LTD.	Not Approved, since no Experience with vendor
		LEVCON VALVES PVT. LTD.	Not Approved, since no Experience with vendor
		FLUIDLINE VALVES COMPANY PVT.	Approved
		A.V.VALVES LIMITED	Approved
		ATAM VALVES PVT. LTD.	Approved
		LEADER VALVES LIMITED	Approved
		CRESCENT VALVES MFG CO. PVT. LTD.	Approved
		MICON VALVES (I) PVT. LTD.	Not Approved, since no Experience with vendor
		HAWA VALVES (INDIA) PVT. LTD.	Approved
		FLOSTEER ENGINEERS PVT. LTD.	Not Approved, since no Experience with vendor
29	FOAM PUMP & AUXILIARIES	MAHESH INDUSTRIES	Approved
		PETRO CHEM INDUSTRIES	Not Approved, since no Experience with vendor
		UNIQUE ENGINEERING ENTPS. PVT. LTD.	Approved
30	FITTINGS	TRIOMECH ENGINEERING PVT. LTD.	Approved
		JINDAL FORGING PVT LTD.	Approved
		REAL FORGE	Approved
		SUPER FORGE	Approved
		PRESHZINGER ENGINEERING	Approved
31	SOCKET WELDED / SCREWED WELDED PIPE FITTINGS	JINDAL FORGING PVT LTD.	Approved
		REAL FORGE	Approved
		SUPER FORGE	Approved
		BHARAT FORGE	Approved
		DYNAMIC FORGE	Approved
		FLOWTECH	Approved
		ENGINEERING SERVICE ENTERPRISE	Approved
		N L HAZRA AND SON	Approved
		M.S. FITTINGS MANUFACTURING CO. PVT	Approved
		LEADER VALVES LIMITED	Approved
		NAV DURGA FORGING AND FITTINGS	Approved

Sl No	Items Description	Name of Vendor	Remarks on Vendor Approval
	SOCKET WELDED / SCREWED WELDED PIPE FITTINGS	FITTECH INDUSTRIES PVT. LTD.	Approved
		PRECISION ENGINEERING INDS.	Approved
		SKY FORGE PRIVATE LIMITED	Approved
		K. S. PIPE FITTINGS PVT. LTD.	Approved
		P.K. TUBES & FITTINGS PVT. LTD.	Approved
		TRUE FORGE PVT.LTD.	Approved
		PIPEFIT ENGINEERS PVT. LTD.	Approved
		U I PIPE FITTINGS PVT. LTD.	Approved
		CARLO DYNATECH INDUSTRIES,	Approved
		FLASH FORGE PVT LTD.	Approved
		PRESHZINGER ENGINEERING	Approved
		UNIQUE ENGINEERING ENTPS. PVT. LTD.	Approved
		S.S.PIPE FITTINGS & FORGINGS	Approved
33	BOLTING MATERIAL	HARYANA FASTNERS	Approved
		KWALITY FORGE	Approved
34	FIRE DETECTION AND ALARM SYSTEM	TECHNICO (INDIA) PVT. LTD.	Not Approved, since no Experience with vendor
		DE S TECHNICO PRIVATE LIMITED	Not Approved, since no Experience with vendor
		AGNICE FIRE PROTECTION PVT. LTD.	Approved
		HITEK ENGINEERING SERVICES	Not Approved, since no Experience with vendor
		STERLING AND WILSON PVT LTD	Approved
		MX SYSTEMS INTERNATIONAL PVT. LTD.	Approved
		NITIN FIRE PROTECTION INDUSTRIES LTD.	Approved
		UTC FIRE & SECURITY INDIA LIMITED.	Not Approved, since no Experience with vendor
		NEW FIRE ENGRS. PVT. LTD.	Approved
		TYCO FIRE & SECURITY INDIA PVT. LTD.	Approved
		FIREPRO SYSTEMS PVT. LTD.	Not Approved, since no Experience with vendor
		NOHMI BOSAI (INDIA) PVT. LTD.	Not Approved, since no Experience with vendor
		DS FIRE SYSTEMS PRIVATE LIMITED	Approved
		MEHTA & ASSOCIATES FIRE PROTECTION	Approved
		CONSILIUM MIDDLE EAST (FZC)	Not Approved, since no Experience with vendor
		LLOYD INSULATIONS (INDIA) LTD.	Approved
		THERMOSYSTEMS PRIVATE LIMITED.	Approved
		CONSILIUM SFS FIRE AND SECURITY SOLUTIONS PVT. LTD.	Not Approved, since no Experience with vendor
		VIMAL FIRE CONTROLS PVT LTD.	Not Approved, since no Experience with vendor

Sl No	Items Description	Name of Vendor	Remarks on Vendor Approval
	FIRE DETECTION AND ALARM SYSTEM	GRID 2 CHIP	Not Approved, since no Experience with vendor
		KOKBAN AUTOMATION PVT. LTD.	Not Approved, since no Experience with vendor
		FIREWIN SAFETY ENGINEERS	Not Approved, since no Experience with vendor
		TOSHNIWAL INDUSTRIES PVT. LTD.	Not Approved, since no Experience with vendor
		KRUNAL ENGINEERING WORKS	Not Approved, since no Experience with vendor
35	CONTROL CABLES	UDEY PYROCABLES PVT. LTD.	Approved
		LEONI CABLE SOLUTIONS (INDIA)	Not Approved, since no Experience with vendor
		ADVANCE CABLE TECHNOLOGIES PVT LTD.	Approved
		LAPP INDIA PVT. LTD.	Approved
		T C COMMUNICATION PVT. LTD.	Approved
		MIDDLE EAST SPECIALIZED CABLES CO.	Not Approved, since no Experience with vendor
36	PLC	TECH MASTERS	These vendors are system integrators and hence not approved. Further approval will be considered based on the indication of the name of original supplier.
		SI ENERGY VENTURES PVT. LTD.	
		LADDER AUTOMATION SOLUTIONS	
		COTMAC ELECTRONICS PVT. LTD.	
		SUN INDUSTRIAL AUTOMATION	
		VIRTUAL AUTOMATION	
		SOLPRO AUTOMATION SYSTEMS	
		CREATIVE ROBOTICS PVT. LTD.	
37	CABLE TRAY	ADVANCE POWER PRODUCTS	Not Approved, since no Experience with vendor
		INDUSTRIAL PERFORATION (I) PVT. LTD.	Approved
		UNITECH FABRICATORS & ENGINEERS PVT	Not Approved, since no Experience with vendor
		RUKMANI ELECTRICAL & COMPONENTS	Approved
		RABI ENGINEERING WORKS PVT. LTD	Approved
		RATAN PROJECTS & ENGG. CO. PVT. LTD.	Approved
		INDIA ELECTRICALS SYNDICATE	Not Approved, since no Experience with vendor
		PREMIER POWER PRODUCTS	Approved
		EROS METAL WORKS (P) LTD.	Approved
		VINFAB ENGINEERS INDIA PRIVATE	Not Approved, since no Experience with vendor
		INDIANA GRATINGS PVT. LTD.	Not Approved, since no Experience with vendor
		PASSIVE INFRA PROJECTS (P) LTD.	Not Approved, since no Experience with vendor

Sl No	Items Description	Name of Vendor	Remarks on Vendor Approval
		ANIL STEELS PVT LTD.	Not Approved, since no Experience with vendor
		M J ENGINEERING WORKS (P) LIMITED	Not Approved, since no Experience with vendor
		PATNY SYSTEMS PVT. LTD	Approved
38	PAINTS AND PRIMER	KANSAI NEROLAC PAINTS LTD.	Approved
		ASIAN PAINTS INDIA) LTD.	Approved
		SHALIMAR PAINTS LTD.	Approved
		BERGER PAINTS INDIA LTD.,	Approved
		COROMANDEL PAINTS LIMITED	Approved
		GRAUER & WEIL (INDIA) LIMITED	Not Approved, since no Experience with vendor
		SYNORGANIC PAINTS PVT. LTD.	Not Approved, since no Experience with vendor
		GRAND POLYCOATS CO. PVT.LTD.	Not Approved, since no Experience with vendor
		ADVANCE PAINTS LTD.	Not Approved, since no Experience with vendor
		HEMPEL PAINTS (INDIA) PVT. LTD.	Approved
		CIPY POLYURETHANES PVT. LTD.	Not Approved, since no Experience with vendor
		KORROCOAT POLYMERS PVT. LTD.	Not Approved, since no Experience with vendor
		CARBOLINE (INDIA) PRIVATE LIMITED	Approved
39	ERW PIPES and GI Pipes	GAJANAN TUBES PRIVATE LIMITED	Approved
		JINDAL INDIA	Approved
		M K K METAL SECTIONS PVT. LTD.	Not Approved, since no Experience with vendor
40	GATE VALVE	A.V.VALVES LIMITED	Approved
		AMPO VALVES INDIA PRIVATE LIMITED	Not Approved, since no Experience with vendor
		LEADER VALVES LIMITED	Approved
		VALVE TECH INDUSTRIES	Not Approved, since no Experience with vendor
		STEEL STRONG VALVES (I) PVT. LTD.	Not Approved, since no Experience with vendor
		SHALIMAR VALVES PVT. LTD.	Approved
		SKILT FABRICATORS PVT.LTD.	Not Approved, since no Experience with vendor
		NITON VALVE INDUSTRIES LTD.	Approved
41	SOLENOID VALVE	ROTEX MANUFACTURERS & ENGINEERS	Approved
		ASCO PVT. LTD.	Approved
		IMI PRECISION ENGG	Not Approved, since no Experience with vendor
		AVCON CONTROLS PVT LTD.	Approved
42	FLANGES	TESHI ENGINEERS	Approved
		DYNAMIC FORGE & FITTINGS PVT. LTD.	Approved

Sl No	Items Description	Name of Vendor	Remarks on Vendor Approval
		ENGINEERING SERVICE ENTERPRISE	Approved
		JINDAL FORGINGS	Approved

The above approval is accorded to the contractor without prejudice to the terms and conditions of the contract.

The receipt of this letter may be acknowledged.

Yours faithfully,

17/12/18

CHIEF ENGINEER /PROJECTS-II
TANGEDCO

Copy to M/s. DESEIN (By mail)

Tamil Nadu Generation and Distribution Company Limited.
(Udangudi Project)

From

Er. U.S.PONGIANNAN,B.E.,
Chief Engineer /Projects-II ,
TANGEDCO,
1st Floor,New EB Quarters
144,Anna salai
Chennai-600 002.
Email- secutpp@tnebnet.org

To

BHEL, PS-PEM,
Power Projects Engineering Institute (PPEI Building),
HRDI & ESI Complex, Plot No. 25, Sector-16A,
Noida-201301 (U.P.)
Email: permindersingh@bhel.in
pedm@bhel.in

Lr. No. CE/PROJ/SE/C/UP/EE/M/ AEE/M/Engineering/ D.597/2018,dt.17.12.2018.

Sir,

Sub.: TANGEDCO-Udangudi 2x660 MW Super Critical Thermal Power Project Stage-I-Vendor Approval for BHEL_PESD-Fire Protection System-Regarding.

Ref.: Your letter ref. No. PESD/CM/UDANGUDI/CM LTR-01, dt.09.11.2018.

<<<O>>>

With reference to your letter cited above, the following vendor approval is accorded for Fire Protection System in line with approved vendors for Ennore SEZ Project.

Sl. No.	Item Description	Name of the Vendor	Remarks on Vendor Approval
1	ERW PIPES AND GI PIPES	UTKARSH INDIA LIMITED	APPROVED
		NEZONE TUBES LIMITED	APPROVED
		APL APOLLO TUBES LIMITED	APPROVED
		DADU PIPES PVT. LTD.	APPROVED
		BHARAT TUBES CORPORATION	APPROVED
		STEEL AUTHORITY OF INDIA LIMITED	APPROVED
		MADRAS STEEL AND TUBES	APPROVED
		BHAWANI INDUSTRIES LTD	APPROVED
		TUBES INDIA	APPROVED
		MOKSHI INDUSTRIES PVT. LTD.	APPROVED
		MAHARASHTRA SEAMLESS LTD.	APPROVED
		SURYA ROSHNI LIMITED	APPROVED
		JINDAL PIPES LIMITED	APPROVED
		SWASTIK PIPE LIMITED	APPROVED
		NAVRATAN PIPE AND PROFILE LIMITED	APPROVED
		INDUS TUBES LIMITED	APPROVED
		FUTNANI STEELS PVT LTD.	APPROVED
2	VALVES	MICON VALVES (I) PVT. LTD.	APPROVED
		NSSL LIMITED	APPROVED
		WEIR BDK VALVES	APPROVED

Sl. No.	Item Description	Name of the Vendor	Remarks on Vendor Approval
	VALVES	B.F.E.SRL BONNEY FORGE	APPROVED
		VALVITALIA S.P.A	APPROVED
		FLOSTEER ENGINEERS PVT. LTD.	APPROVED
		OSWAL INDUSTRIES LTD.	APPROVED
		L & T VALVES LIMITED	APPROVED
		FOURESS ENGINEERING (I)PVT.LTD	APPROVED
3	FITTINGS	ENGINEERING SERVICE ENTERPRISE	APPROVED
		N L HAZRA AND SON	APPROVED
		M.S. FITTINGS MANUFACTURING CO. PVT	APPROVED
		POONAM ENTERPRISE	APPROVED
		NAV DURGA FORGING AND FITTINGS	APPROVED
		TUBE TURN (INDIA) P. LTD.	APPROVED
		UNITECH MACHINES LIMITED	APPROVED
		K. S. PIPE FITTINGS PVT. LTD.	APPROVED
		P.K. TUBES & FITTINGS PVT. LTD.	APPROVED
		TRUE FAB ENGINEER (P) LTD.	APPROVED
		DEE DEVELOPMENT ENGINEERS LTD.	APPROVED
		TRUE FORGE PVT.LTD.,	APPROVED
		PIPEFIT ENGINEERS PVT. LTD.	APPROVED
		PETRO CHEM INDUSTRIES	APPROVED
		SAWAN ENGINEERS PVT. LTD.	APPROVED
		GUJARAT INFRAPIPES PVT.LTD.	APPROVED
		TUBE PRODUCTS INCORPORATE	APPROVED
		WEIFANG HUODA PIPE FITTINGS	APPROVED
		U I PIPE FITTINGS PVT. LTD.	APPROVED
4	FLANGES	KUNJ FORGINGS PVT. LTD.	APPROVED
		C.D.ENGINEERING CO.	APPROVED
		KISAAN STEELS (PVT) LTD.	APPROVED
		CHW FORGE PRIVATE LIMITED	APPROVED
		C.D. INDUSTRIES,	APPROVED
		NAV DURGA FORGING AND FITTINGS	APPROVED
		TRUE FORGE PVT.LTD.	APPROVED
		PIPEFIT ENGINEERS PVT. LTD.	APPROVED
		TUBE PRODUCTS INCORPORATE	APPROVED
		METAL FORGINGS P. LTD.	APPROVED
		THE PUNJAB STEEL WORKS,	APPROVED
		PRESHZINGER ENGINEERING	APPROVED
		KIRLOSKAR BROTHERS LTD	APPROVED
		KSB PUMPS LIMITED,	APPROVED
		SULZER PUMPS INDIA PRIVATE LIMITED.	APPROVED
		WILO MATHER AND PLATT PUMPS	APPROVED
		FLOWMORE LIMITED	APPROVED

Sl. No.	Item Description	Name of the Vendor	Remarks on Vendor Approval
5	BOLTING MATERIAL (U Bolt, Nuts & Clamps)	SREE PAVITHRA INDUSTRIES,	APPROVED
		UDEHRA FASTENERS LIMITED	APPROVED
		MORNING STAR INDUSTRIES,	APPROVED
		PIONEER NUTS AND BOLTS PVT.LTD	APPROVED
		MEGA ENGINEERING PVT. LTD.	APPROVED
		PRESIDENT ENGINEERING WORKS	APPROVED
		BOLTMASTER (INDIA)PVT.LTD.	APPROVED
		MULTI FASTNERS PVT. LTD.	APPROVED
		ATLAS FASTENERS	APPROVED
6	POWER CABLES	SUNGOV ENGINEERING PVT LTD.	APPROVED
		ASIAN INDUSTRIAL VALVES AND	APPROVED
		NISAN SCIENTIFIC PROCESS	APPROVED
		SKILT FABRICATORS PVT.LTD.	APPROVED
		FILTERATION ENGINEERS INDIA PVT LTD.	APPROVED
		JAY-EESH ENGINEERING COMPANY	APPROVED
		SCIENTIFIC DEVICES (BOMBAY) PVT. LT	APPROVED
		GRAND PRIX ENGINEERING PVT. LTD.	APPROVED
		TRIVENI EQUIPMENTS PVT LTD.	APPROVED
		GUJARAT OTOFILT	APPROVED
		H K ENTERPRISES	APPROVED
		SPIRAX MARSHALL LIMITED	APPROVED
7	CONTROL CABLES	GUPTA POWER INFRASTRUCTURE LTD.	APPROVED
		PAGODA CABLES PVT. LTD.	APPROVED
		ASSOCIATED CABLES PVT LTD.	APPROVED
		RAVIN CABLES LTD	APPROVED
		SBEE CABLES (INDIA) LIMITED	APPROVED
		ELKAY TELELINKS LIMITED	APPROVED
		SUYOG ELECTRICALS LTD.	APPROVED
		POLYCAB WIRES PVT.LTD.	APPROVED
		GEMSCAB INDUSTRIES LTD.	APPROVED
		SRIRAM CABLES PVT. LTD.	APPROVED
		SPECIAL CABLES PVT. LTD.	APPROVED
		PARAMOUNT COMMUNICATIONS LTD.	APPROVED
		DELTON CABLES LIMITED	APPROVED
		KEI INDUSTRIES LIMITED	APPROVED
		CMI LIMITED	APPROVED
		CORDS CABLE INDUSTRIES LTD.	APPROVED
		KEC INTERNATIONAL LIMITED	APPROVED
		THERMO CABLES LIMITED	APPROVED
		UNIVERSAL CABLES LTD.	APPROVED
		NICCO CORPORATION LTD HYD	APPROVED

Sl. No.	Item Description	Name of the Vendor	Remarks on Vendor Approval
8	GASKETS	GOODRICH GASKET PVT. LTD.	APPROVED
		MADRAS INDUSTRIAL PRODUCTS	APPROVED
		I G P ENGINEERS LIMITED	APPROVED
		TEEKAY FLOWFLEX PVT. LTD.	APPROVED
		UNI KLINGER LTD.	APPROVED
		UNIQUE INDUSTRIAL PACKINGS PVT. LTD.	APPROVED
		JAMES WALKER INMARCO INDS PVT LTD.	APPROVED
		STARFLEX SEALING INDIA PVT. LTD.	APPROVED
		JYOTHI INDUSTRIES	APPROVED
9	ELECTRICAL HOIST	MM ENGINEERS PVT. LTD.	APPROVED
		EDDYCRANES ENGINEERS PVT.	APPROVED
		CENTURY CRANE ENGINEERS PVT. LTD.	APPROVED
		ROCK WELL HOISTO CRANES PVT. LTD.	APPROVED
		GRIP ENGINEERS PVT. LTD.	APPROVED
		SOUTHERN PLANTAIDS PVT LIMITED	APPROVED

The above approval is accorded to the contractor without prejudice to the terms and conditions of the contract.

The receipt of this letter may be acknowledged.

Yours faithfully,

17/12/18

CHIEF ENGINEER /PROJECTS-II
TANGEDCO

Copy to M/s. DESEIN (By mail)

Annexure-10A: MASTER DOCUMENT LIST - Hydrant-Spray Pump: ~~Motor &~~ Diesel Engine driven

	Vendor Name:				PROJECT:											Supplier Doc- No:								
	Vendor Contact Person:				BHEL PO No.		PO date:			PO Dly. Date:						Rev- No.								
	Vendor contact No.				Supplier's Job No.											Date:								
	SYSTEM/PACKAGE:	Hydrant Pump				TODAY-DATE	13/Feb/19			Sumission status to BHEL														
Sl.No	DRG/DOC. NAME	DRG/ DOC NO.	NO. OF SHTS.	CAT	CRITICAL FOR MFG?	REQD.FOR CUSTOMER SUBMISSION?	Plan date of submission	Count of DUE as on Dt.	STATUS	Rev-0			Rev-1			Rev-2			Rev-3			Rev-4		
			NO.	(A / I)	(Y/N)	(Y/N)	dd-mmm-yyyy		" "/PV/PB /PC/AA	SD	AD	APP.CAT	SD	AD	APP.CAT	SD	AD	APP.CAT	SD	AD	APP.CAT	SD	AD	APP.CAT
1.0 Mechanical																								
A	MECHANICAL																							
1	Pump Data Sheet -Engine & Motor Driven	Later		A	Y	Y	Within 2 weeks after PO placement																	
2	Pump Performance curve-Motor Driven	Later		I	Y	Y	Within 2 weeks after PO placement																	
3	Pump Performance curve-Engine Driven	Later		I	Y	Y	Within 2 weeks after PO placement																	
4	Pump & Motor assembly GA drawing	Later		A	Y	Y	Within 2 weeks after PO placement																	
5	Pump & Engine assembly GA drawing	Later		A	Y	Y	Within 2 weeks after PO placement																	
6	Pump Cross Sectional Drawing	Later		I	Y	N	Within 2 weeks after PO placement																	
7	~~Motor Data Sheet~~	~~Later~~		~~A~~	~~Y~~	~~Y~~	~~Within 2 weeks after PO placement~~																	
8	~~Motor GA drawing~~	~~Later~~		~~A~~	~~Y~~	~~Y~~	~~Within 2 weeks after PO placement~~																	
9	~~Motor Curves~~	~~Later~~		~~I~~	~~Y~~	~~Y~~	~~Within 2 weeks after PO placement~~																	
10	~~T-S Curve~~	~~Later~~		~~I~~	~~N~~	~~N~~	~~Within 2 weeks after PO placement~~																	
11	Diesel engine GA Drawing	Later		A	Y	N	Within 2 weeks after PO placement																	
12	Diesel engine Data Sheet	Later		A	Y	Y	Within 2 weeks after PO placement																	
13	Control Panel GA Drawing & Wiring Diagram	Later		A	Y	Y	Within 2 weeks after PO placement																	
14	Battery Charger & Battery Data Sheet	Later		A	Y	Y	Within 2 weeks after PO placement																	
15	Fuel tank Drawing	Later		A	Y	N	Within 2 weeks after PO placement																	
16	P&ID/Schematic of Diesel Engine	Later		I	N	N	Within 2 weeks after PO placement																	
17	Coupling GA Drawing for Motor Driven Pump	Later		I	Y	N	Within 2 weeks after PO placement																	
18	Coupling GA Drawing for Engine Driven Pump	Later		I	Y	N	Within 2 weeks after PO placement																	
19	Mechanical Seal GA Drawing and details	Later		I	Y	N	Within 2 weeks after PO placement																	
B	INSTRUMENTTAION																							
1	Data Sheet of Level Switch	Later		I	N	N	Within 4 weeks after PO placement																	
2	Datasheet of Motor Bearing & Winding RTDs	Later		I	N	N	Within 4 weeks after PO placement																	
3	Datasheet of Motor Bearing TGs	Later		I	N	N	Within 4 weeks after PO placement																	
4	Data Sheet of Level Gauge	Later		I	N	N	Within 4 weeks after PO placement																	
5	Data Sheet of Junction Box	Later		I	N	N	Within 4 weeks after PO placement																	
6	GAD of Junction Box	Later		I	N	N	Within 4 weeks after PO placement																	
C	MISCELLANEOUS																							
1	Performance Test Procedure	Later		A	Y	N																		
2	NPSH test procedure	Later		I	N	N	Within 8 weeks after PO placement																	
3	Vibration test procedure	Later		I	N	N	Within 8 weeks after PO placement																	
4	Temperature rise test procedure	Later		I	N	N	Within 8 weeks after PO placement																	
5	Hydro Test Procedure	Later		I	N	N	Within 8 weeks after PO placement																	

Annexure-10A: MASTER DOCUMENT LIST - Hydrant-Spray Pump: ~~Motor &~~ Diesel Engine driven

	Vendor Name:				PROJECT:											Supplier Doc- No:								
	Vendor Contact Person:				BHEL PO No.		PO date:				PO Dly. Date:					Rev- No.								
	Vendor contact No.				Supplier's Job No.											Date:								
	SYSTEM/PACKAGE:	Hydrant Pump				TODAY-DATE	13/Feb/19			Sumission status to BHEL														
Sl.No	DRG/DOC. NAME	DRG/ DOC NO.	NO. OF SHTS.	CAT	CRITICAL FOR MFG?	REQD.FOR CUSTOMER SUBMISSION?	Plan date of submission	Count of DUE as on Dt.	STATUS	Rev-0			Rev-1			Rev-2			Rev-3			Rev-4		
			NO.	(A / I)	(Y/N)	(Y/N)	dd-mmm-yyyy		" "/PV/PB /PC/AA	SD	AD	APP.CAT	SD	AD	APP.CAT	SD	AD	APP.CAT	SD	AD	APP.CAT	SD	AD	APP.CAT
6	NDE Test Procedure	Later		I	N	N	Within 8 weeks after PO placement																	
7	Balancing_LP test & ultrasonic test procedure	Later		I	N	N	Within 8 weeks after PO placement																	
8	Painting proccedure	Later		A	N	N	Within 10 weeks after PO placement																	
9	Packing List	Later		I	N	N	Before Despatach																	
10	BILL OF MATERIAL	Later		A	N	N	Within 10 weeks after PO placement																	
11	BILLING BREAKUP	Later		A	N	N	Before Despatach																	
12	QUALITY ASSURANCE PLAN	Later		A	N	Y	Within 4 weeks after PO placement																	
13	SUB VENDOR LIST	Later		I	N	N	Within 4 weeks after PO placement																	
14	COMMISSIONING SPARES LIST	Later		A	N	N	Within 4 weeks after PO placement																	
15	Mandatory Spares List	Later		A	N	N	Within 4 weeks after PO placement																	
16	LUBE OIL SCHEDULE	Later		I	N	N	Within 8 weeks after PO placement																	
17	STARTUP PROCEDURE	Later		I	N	N	Within 8 weeks after PO placement																	
18	ERECTION PROCEDURE & Comissioing procedure	Later		I	N	N	Within 8 weeks after PO placement																	
19	INSPECTION/TESTS REPORTS/CERTIFICATE	Later		I	N	N	Within 8 weeks after PO placement																	
20	O& M Manuals(Soft Copies)	Later		A	N	N	After Approval of all engineering drawings/documents																	
21	O& M Manuals(Hard Copies)** ** hard copy shall be furnished after getting concurrence on soft copy.	Later		I	N	N	After Approval of all engineering drawings/documents																	
							TOTAL	0		^APP.CAT														
	A-Approval Category	PV-Commented and pending with vendor					TOTAL "PV"		0	A1-'Approved							Approved By:							
	I-Information Category	PB- Pending with BHEL					TOTAL "PB"		0	A2-'Mfg. Clearance given subject incorporation of comments							Sign :							
		PC- Pending with Customer					TOTAL "PC"		0	A3-Commented.Revision & resubmission required.														
		AA- Approved					TOTAL "AA"		0	A4- Retained for info.							Date :							
		OD-Overdue					TOTAL "OD"		0															
		" " - Not yet Due.							5															

Vendor documentation status									
Total No of Docs	Due as on Date	Submitted by vendor as on Dt.	Approved by BHEL as on Dt.	Commented by BHEL as on Dt.	Pending with BHEL/CUSTOMER as on date	%age of Dos Approved	%age of critical Dos Approved	Is Mfg. Clearance given?	Status/ Remarks
(Nos)	(Nos)	(Nos)	(Nos)	(Nos)	(Nos)	% age	% age	(Y/N)./ (If Y) put Dt.	
0	0	0	0	0	0	#DIV/0!	0.00%	Y	

Annexure-10B: MASTER DOCUMENT LIST - Jockey pump

	Vendor Name:				PROJECT:											Supplier Doc- No:				
	Vendor Contact Person:				BHEL PO No.		PO date:				PO Dly. Date:					Rev- No.				
	Vendor contact No.				Supplier's Job No.											Date:				
	SYSTEM/PACKAGE:	Condenser Cooling Water Pump				TODAY-DATE	13/Feb/19			Sumission status to BHEL										
Sl.No	DRG/DOC. NAME	DRG/ DOC NO.	NO. OF SHTS.	CAT	CRITICAL FOR MFG?	REQD.FOR CUSTOMER SUBMISSION?	Plan date of submission	Count of DUE as on Dt.	STATUS	Rev-0			Rev-1			Rev-2			Final Rev-(R)	REMARKS
			NO.	(A / I)	(Y/N)	(Y/N)	dd-mmm-yyyy		" "/PV/PB /PC/AA	SD	AD	APP.CAT	SD	AD	APP.CAT	SD	AD	APP.CAT	Date	
1.0 Mechanical																				
A	MECHANICAL																			
1	Pump Data Sheet	Later		A	Y	Y	Within 2 weeks after PO placement													
2	Pump Performance curve-Motor Driven	Later		I	Y	Y	Within 2 weeks after PO placement													
3	Pump & Motor assembly GA drawing	Later		A	Y	Y	Within 2 weeks after PO placement													
4	Pump Cross Sectional Drawing	Later		I	Y	N	Within 2 weeks after PO placement													
5	Motor Data Sheet	Later		A	Y	Y	Within 2 weeks after PO placement													
6	Motor GA drawing	Later		A	Y	Y	Within 2 weeks after PO placement													
7	Motor Curves	Later		I	Y	Y	Within 2 weeks after PO placement													
8	T-S Curve	Later		I	N	N	Within 2 weeks after PO placement													
9	Coupling GA Drawing for Motor Driven Pump	Later		I	Y	N	Within 2 weeks after PO placement													
10	Mechanical Seal GA Drawing and details	Later		I	Y	N	Within 2 weeks after PO placement													
B	INSTRUMENTTAION																			
C	MISCELLANEOUS																			
1	Performance Test Procedure	Later		A	Y	N	Within 8 weeks after PO placement													
2	NPSH test procedure	Later		I	N	N	Within 8 weeks after PO placement													
3	Vibration test procedure	Later		I	N	N	Within 8 weeks after PO placement													
4	Temperature rise test procedure	Later		I	N	N	Within 8 weeks after PO placement													
5	Hydro Test Procedure	Later		I	N	N	Within 8 weeks after PO placement													
6	NDE Test Procedure	Later		I	N	N	Within 8 weeks after PO placement													
7	Balancing_LP test & ultrasonic test procedure	Later		I	N	N	Within 8 weeks after PO placement													
8	Painting proccedure	Later		A	N	N	Within 10 weeks after PO placement													
9	Packing List	Later		I	N	N	Before Despatach													

Annexure-10B: MASTER DOCUMENT LIST - Jockey pump

	Vendor Name:				PROJECT:											Supplier Doc- No:				
	Vendor Contact Person:				BHEL PO No.		PO date:				PO Dly. Date:					Rev- No.				
	Vendor contact No.				Supplier's Job No.											Date:				
	SYSTEM/PACKAGE:	Condenser Cooling Water Pump				TODAY-DATE	13/Feb/19			Sumission status to BHEL										
Sl.No	DRG/DOC. NAME	DRG/ DOC NO.	NO. OF SHTS.	CAT	CRITICAL FOR MFG?	REQD.FOR CUSTOMER SUBMISSION?	Plan date of submission	Count of DUE as on Dt.	STATUS	Rev-0			Rev-1			Rev-2			Final Rev-(R)	REMARKS
			NO.	(A / I)	(Y/N)	(Y/N)	dd-mmm-yyyy		" "/PV/PB /PC/AA	SD	AD	APP.CAT	SD	AD	APP.CAT	SD	AD	APP.CAT	Date	
10	BILL OF MATERIAL	Later		A	N	N	Within 10 weeks after PO placement													
11	BILLING BREAKUP	Later		A	N	N	Before Despatach													
12	QUALITY ASSURANCE PLAN	Later		A	N	Y	Within 4 weeks after PO placement													
13	SUB VENDOR LIST	Later		I	N	N	Within 4 weeks after PO placement													
14	COMMISSIONING SPARES LIST	Later		A	N	N	Within 4 weeks after PO placement													
15	Mandatory Spares List	Later		A	N	N	Within 4 weeks after PO placement													
16	LUBE OIL SCHEDULE	Later		I	N	N	Within 8 weeks after PO placement													
17	STARTUP PROCEDURE	Later		I	N	N	Within 8 weeks after PO placement													
18	ERECTION PROCEDURE & Comissioing procedure	Later		I	N	N	Within 8 weeks after PO placement													
19	INSPECTION/TESTS REPORTS/CERTIFICATE	Later		I	N	N	Within 8 weeks after PO placement													
20	O& M Manuals(Soft Copies)	Later		A	N	N	After Approval of all engineering drawings/documents													
21	O& M Manuals(Hard Copies)** ** hard copy shall be furnished after getting concurrence on soft copy.	Later		I	N	N	After Approval of all engineering drawings/documents													
							TOTAL	0		^APP.CAT										
	A-Approval Category	PV-Commented and pending with vendor					TOTAL "PV"		0	A1-'Approved							Approved By:			
	I-Information Category	PB- Pending with BHEL					TOTAL "PB"		0	A2-'Mfg. Clearance given subject incorporation of comments							Sign :			
		PC- Pending with Customer					TOTAL "PC"		0	A3-Commented.Revision & resubmission required.										
		AA- Approved					TOTAL "AA"		0	A4- Retained for info.							Date :			
		" " - Not yet Due.																		
		OD-Overdue					TOTAL "OD"		0											
		" " - Not yet Due.																		

Vendor documentation status									
Total No of Docs	Due as on Date	Submitted by vendor as on Dt.	Approved by BHEL as on Dt.	Commented by BHEL as on Dt.	Pending with BHEL/CUSTOMER as on date	%age of Dos Approved	%age of critical Dos Approved	Is Mfg. Clearance given?	Status/ Remarks
(Nos)	(Nos)	(Nos)	(Nos)	(Nos)	(Nos)	% age	% age	(Y/N)./ (If Y) put Dt.	
0	0	0	0	0	0	#DIV/0!	0.00%	Y	

Annexure-10C: MASTER DOCUMENT LIST - Booster Pump: Motor & Diesel Engine driven

	Vendor Name:				PROJECT:											Supplier Doc- No:				
	Vendor Contact Person:				BHEL PO No.		PO date:				PO Dly. Date:					Rev- No.				
	Vendor contact No.				Supplier's Job No.											Date:				
	SYSTEM/PACKAGE:	Hydrant Pump				TODAY-DATE	13/Feb/19			Sumission status to BHEL										
Sl.No	DRG/DOC. NAME	DRG/ DOC NO.	NO. OF SHTS.	CAT	CRITICAL FOR MFG?	REQD.FOR CUSTOMER SUBMISSION?	Plan date of submission	Count of DUE as on Dt.	STATUS	Rev-0			Rev-1			Rev-2			Final Rev-(R)	REMARKS
			NO.	(A / I)	(Y/N)	(Y/N)	dd-mmm-yyyy		" "/PV/PB /PC/AA	SD	AD	APP.CAT	SD	AD	APP.CAT	SD	AD	APP.CAT	Date	
1.0 Mechanical																				
A	MECHANICAL																			
1	Pump Data Sheet -Engine & Motor Driven	Later		A	Y	Y	Within 2 weeks after PO placement													
2	Pump Performance curve-Motor Driven	Later		I	Y	Y	Within 2 weeks after PO placement													
3	Pump Performance curve-Engine Driven	Later		I	Y	Y	Within 2 weeks after PO placement													
4	Pump & Motor assembly GA drawing	Later		A	Y	Y	Within 2 weeks after PO placement													
5	Pump & Engine assembly GA drawing	Later		A	Y	Y	Within 2 weeks after PO placement													
6	Pump Cross Sectional Drawing	Later		I	Y	N	Within 2 weeks after PO placement													
7	Motor Data Sheet	Later		A	Y	Y	Within 2 weeks after PO placement													
8	Motor GA drawing	Later		A	Y	Y	Within 2 weeks after PO placement													
9	Motor Curves	Later		I	Y	Y	Within 2 weeks after PO placement													
10	T-S Curve	Later		I	N	N	Within 2 weeks after PO placement													
11	Diesel engine GA Drawing	Later		A	Y	N	Within 2 weeks after PO placement													
12	Diesel engine Data Sheet	Later		A	Y	Y	Within 2 weeks after PO placement													
13	Control Panel GA Drawing & Wiring Diagram	Later		A	Y	Y	Within 2 weeks after PO placement													
14	Battery Charger & Battery Data Sheet	Later		A	Y	Y	Within 2 weeks after PO placement													
15	Fuel tank Drawing	Later		A	Y	N	Within 2 weeks after PO placement													
16	P&ID/Schematic of Diesel Engine	Later		I	N	N	Within 2 weeks after PO placement													
17	Coupling GA Drawing for Motor Driven Pump	Later		I	Y	N	Within 2 weeks after PO placement													
18	Coupling GA Drawing for Engine Driven Pump	Later		I	Y	N	Within 2 weeks after PO placement													
19	Mechanical Seal GA Drawing and details	Later		I	Y	N	Within 2 weeks after PO placement													
B	INSTRUMENTTAION																			
1	Data Sheet of Level Switch	Later		I	N	N	Within 4 weeks after PO placement													
2	Datasheet of Motor Bearing & Winding RTDs	Later		I	N	N	Within 4 weeks after PO placement													
3	Datasheet of Motor Bearing TGs	Later		I	N	N	Within 4 weeks after PO placement													
4	Data Sheet of Level Gauge	Later		I	N	N	Within 4 weeks after PO placement													
5	Data Sheet of Junction Box	Later		I	N	N	Within 4 weeks after PO placement													
6	GAD of Junction Box	Later		I	N	N	Within 4 weeks after PO placement													
C	MISCELLANEOUS																			
1	Performance Test Procedure	Later		A	Y	N														
2	NPSH test procedure	Later		I	N	N	Within 8 weeks after PO placement													
3	Vibration test procedure	Later		I	N	N	Within 8 weeks after PO placement													
4	Temperature rise test procedure	Later		I	N	N	Within 8 weeks after PO placement													
5	Hydro Test Procedure	Later		I	N	N	Within 8 weeks after PO placement													

Annexure-10C: MASTER DOCUMENT LIST - Booster Pump: Motor & Diesel Engine driven

	Vendor Name:				PROJECT:											Supplier Doc- No:				
	Vendor Contact Person:				BHEL PO No.		PO date:				PO Dly. Date:					Rev- No.				
	Vendor contact No.				Supplier's Job No.											Date:				
	SYSTEM/PACKAGE:	Hydrant Pump				TODAY-DATE	13/Feb/19			Sumission status to BHEL										
Sl.No	DRG/DOC. NAME	DRG/ DOC NO.	NO. OF SHTS.	CAT	CRITICAL FOR MFG?	REQD.FOR CUSTOMER SUBMISSION?	Plan date of submission	Count of DUE as on Dt.	STATUS	Rev-0			Rev-1			Rev-2			Final Rev-(R)	REMARKS
			NO.	(A / I)	(Y/N)	(Y/N)	dd-mmm-yyyy		" "/PV/PB /PC/AA	SD	AD	APP.CAT	SD	AD	APP.CAT	SD	AD	APP.CAT	Date	
6	NDE Test Procedure	Later		I	N	N	Within 8 weeks after PO placement													
7	Balancing_LP test & ultrasonic test procedure	Later		I	N	N	Within 8 weeks after PO placement													
8	Painting proccedure	Later		A	N	N	Within 10 weeks after PO placement													
9	Packing List	Later		I	N	N	Before Despatach													
10	BILL OF MATERIAL	Later		A	N	N	Within 10 weeks after PO placement													
11	BILLING BREAKUP	Later		A	N	N	Before Despatach													
12	QUALITY ASSURANCE PLAN	Later		A	N	Y	Within 4 weeks after PO placement													
13	SUB VENDOR LIST	Later		I	N	N	Within 4 weeks after PO placement													
14	COMMISSIONING SPARES LIST	Later		A	N	N	Within 4 weeks after PO placement													
15	Mandatory Spares List	Later		A	N	N	Within 4 weeks after PO placement													
16	LUBE OIL SCHEDULE	Later		I	N	N	Within 8 weeks after PO placement													
17	STARTUP PROCEDURE	Later		I	N	N	Within 8 weeks after PO placement													
18	ERECTION PROCEDURE & Comissioing procedure	Later		I	N	N	Within 8 weeks after PO placement													
19	INSPECTION/TESTS REPORTS/CERTIFICATE	Later		I	N	N	Within 8 weeks after PO placement													
20	O& M Manuals(Soft Copies)	Later		A	N	N	After Approval of all engineering drawings/documents													
21	O& M Manuals(Hard Copies)** ** hard copy shall be furnished after getting concurrence on soft copy.	Later		I	N	N	After Approval of all engineering drawings/documents													
							TOTAL	0		^APP.CAT										
	A-Approval Category	PV-Commented and pending with vendor					TOTAL "PV"		0	A1-'Approved							Approved By:			
	I-Information Category	PB- Pending with BHEL					TOTAL "PB"		0	A2-'Mfg. Clearance given subject incorporation of comments							Sign :			
		PC- Pending with Customer					TOTAL "PC"		0	A3-Commented.Revision & resubmission required.										
		AA- Approved					TOTAL "AA"		0	A4- Retained for info.							Date :			
		OD-Overdue					TOTAL "OD"		0											
		" " - Not yet Due.							5											

Vendor documentation status									
Total No of Docs	Due as on Date	Submitted by vendor as on Dt.	Approved by BHEL as on Dt.	Commented by BHEL as on Dt.	Pending with BHEL/CUSTOMER as on date	%age of Dos Approved	%age of critical Dos Approved	Is Mfg. Clearance given?	Status/ Remarks
(Nos)	(Nos)	(Nos)	(Nos)	(Nos)	(Nos)	% age	% age	(Y/N)./ (If Y) put Dt.	
0	0	0	0	0	0	#DIV/0!	0.00%	Y	

Annexure-10D: MASTER DOCUMENT LIST - SEA WATER INTAKE PUMP

	Vendor Name:				PROJECT:											Supplier Doc- No:				
	Vendor Contact Person:				BHEL PO No.		PO date:				PO Dly. Date:					Rev- No.				
	Vendor contact No.				Supplier's Job No.											Date:				
	SYSTEM/PACKAGE:	Condenser Cooling Water Pump				TODAY-DATE	13/Feb/19			Sumission status to BHEL										
Sl.No	DRG/DOC. NAME	DRG/ DOC NO.	NO. OF SHTS.	CAT	CRITICAL FOR MFG?	REQD.FOR CUSTOMER SUBMISSION?	Plan date of submission	Count of DUE as on Dt.	STATUS	Rev-0			Rev-1			Rev-2			Final Rev-(R)	REMARKS
			NO.	(A / I)	(Y/N)	(Y/N)	dd-mmm-yyyy		" "/PV/PB /PC/AA	SD	AD	APP.CAT	SD	AD	APP.CAT	SD	AD	APP.CAT	Date	
1.0 Mechanical																				
A	MECHANICAL																			
1	Pump Data Sheet	Later		A	Y	Y	Within 2 weeks after PO placement													
2	Pump Performance curve-Motor Driven	Later		I	Y	Y	Within 2 weeks after PO placement													
3	Pump & Motor assembly GA drawing	Later		A	Y	Y	Within 2 weeks after PO placement													
4	Pump Cross Sectional Drawing	Later		I	Y	N	Within 2 weeks after PO placement													
5	Motor Data Sheet	Later		A	Y	Y	Within 2 weeks after PO placement													
6	Motor GA drawing	Later		A	Y	Y	Within 2 weeks after PO placement													
7	Motor Curves	Later		I	Y	Y	Within 2 weeks after PO placement													
8	T-S Curve	Later		I	N	N	Within 2 weeks after PO placement													
9	Coupling GA Drawing for Motor Driven Pump	Later		I	Y	N	Within 2 weeks after PO placement													
10	Mechanical Seal GA Drawing and details	Later		I	Y	N	Within 2 weeks after PO placement													
B	INSTRUMENTTAION																			
C	MISCELLANEOUS																			
1	Performance Test Procedure	Later		A	Y	N	Within 8 weeks after PO placement													
2	NPSH test procedure	Later		I	N	N	Within 8 weeks after PO placement													
3	Vibration test procedure	Later		I	N	N	Within 8 weeks after PO placement													
4	Temperature rise test procedure	Later		I	N	N	Within 8 weeks after PO placement													
5	Hydro Test Procedure	Later		I	N	N	Within 8 weeks after PO placement													
6	NDE Test Procedure	Later		I	N	N	Within 8 weeks after PO placement													
7	Balancing_LP test & ultrasonic test procedure	Later		I	N	N	Within 8 weeks after PO placement													
8	Painting proccedure	Later		A	N	N	Within 10 weeks after PO placement													
9	Packing List	Later		I	N	N	Before Despatach													

Annexure-10D: MASTER DOCUMENT LIST - SEA WATER INTAKE PUMP

	Vendor Name:				PROJECT:											Supplier Doc- No:				
	Vendor Contact Person:				BHEL PO No.		PO date:				PO Dly. Date:					Rev- No.				
	Vendor contact No.				Supplier's Job No.											Date:				
	SYSTEM/PACKAGE:	Condenser Cooling Water Pump				TODAY-DATE	13/Feb/19			Sumission status to BHEL										
Sl.No	DRG/DOC. NAME	DRG/ DOC NO.	NO. OF SHTS.	CAT	CRITICAL FOR MFG?	REQD.FOR CUSTOMER SUBMISSION?	Plan date of submission	Count of DUE as on Dt.	STATUS	Rev-0			Rev-1			Rev-2			Final Rev-(R)	REMARKS
			NO.	(A / I)	(Y/N)	(Y/N)	dd-mmm-yyyy		" "/PV/PB /PC/AA	SD	AD	APP.CAT	SD	AD	APP.CAT	SD	AD	APP.CAT	Date	
10	BILL OF MATERIAL	Later		A	N	N	Within 10 weeks after PO placement													
11	BILLING BREAKUP	Later		A	N	N	Before Despatach													
12	QUALITY ASSURANCE PLAN	Later		A	N	Y	Within 4 weeks after PO placement													
13	SUB VENDOR LIST	Later		I	N	N	Within 4 weeks after PO placement													
14	COMMISSIONING SPARES LIST	Later		A	N	N	Within 4 weeks after PO placement													
15	Mandatory Spares List	Later		A	N	N	Within 4 weeks after PO placement													
16	LUBE OIL SCHEDULE	Later		I	N	N	Within 8 weeks after PO placement													
17	STARTUP PROCEDURE	Later		I	N	N	Within 8 weeks after PO placement													
18	ERECTION PROCEDURE & Comissioing procedure	Later		I	N	N	Within 8 weeks after PO placement													
19	INSPECTION/TESTS REPORTS/CERTIFICATE	Later		I	N	N	Within 8 weeks after PO placement													
20	O& M Manuals(Soft Copies)	Later		A	N	N	After Approval of all engineering drawings/documents													
21	O& M Manuals(Hard Copies)** ** hard copy shall be furnished after getting concurrence on soft copy.	Later		I	N	N	After Approval of all engineering drawings/documents													
							TOTAL	0		^APP.CAT										
	A-Approval Category	PV-Commented and pending with vendor					TOTAL "PV"		0	A1-'Approved							Approved By:			
	I-Information Category	PB- Pending with BHEL					TOTAL "PB"		0	A2-'Mfg. Clearance given subject incorporation of comments							Sign :			
		PC- Pending with Customer					TOTAL "PC"		0	A3-Commented.Revision & resubmission required.										
		AA- Approved					TOTAL "AA"		0	A4- Retained for info.							Date :			
		" " - Not yet Due.																		
		OD-Overdue					TOTAL "OD"		0											
		" " - Not yet Due.																		

Vendor documentation status									
Total No of Docs	Due as on Date	Submitted by vendor as on Dt.	Approved by BHEL as on Dt.	Commented by BHEL as on Dt.	Pending with BHEL/CUSTOMER as on date	%age of Dos Approved	%age of critical Dos Approved	Is Mfg. Clearance given?	Status/ Remarks
(Nos)	(Nos)	(Nos)	(Nos)	(Nos)	(Nos)	% age	% age	(Y/N)./ (If Y) put Dt.	
0	0	0	0	0	0	#DIV/0!	0.00%	Y	

ANNEXURE-11: DEVIATION FORMAT
[For Technical Specification, PY-51497, Rev01]

Sl. No.	Section / Part/Subsection	Page No.	Clause No.	Bid Specification Requirement	Bidder's Deviation

Notes:

1. Bidder to furnish duly filled format along with SEAL & SIGN along with their offer.
2. All the pre-bid queries (if any) shall be raised before submission of the offer as per pre-bid query format (Annexure- 12).
3. Deviations, which are impractical, and the same were raised during pre-bid stage as per pre-bid query format (Annexure-12), but still purchaser's reply/clarifications could not be met shall only be raised in this format.
4. If there are no deviations, bidders shall indicate as "No deviation" and submit the same along with their offer.

5. Deviations indicated elsewhere in bidders offer except raised through this format shall not be considered and reviewed during technical evaluation of their offer.

SIGNATURE : _____
NAME : _____
DESIGNATION : _____
COMPANY : _____
DATE : _____

COMPANY SEAL

ANNEXURE-12: PRE-BID QUERIES FORMAT
[For Technical Specification, PY-51497, Rev01]

Sl. No.	Section / Part/Subsection	Page No.	Clause No.	Bid Specification	Bidder's Query	Purchaser's Reply

Note: **During Preparation of Pre-Bid Queries, Complete Tender Specification Doc. No. PY-51497 (along with all Annexures) shall also be referred.**

E. FIELD INSTRUMENTS

I. PRESSURE

This section provides general hardware guidelines for field instruments and equipment to be supplied under this specification.

Field transmitters shall be smart type with **HART** protocol. Temperature & Pressure switches shall be of Dual Snap type for vibration prone areas.

A. Pressure Transmitter

01.	Working Principle	:	Smart
02.	Type	:	2 - Wire
03.	Output Signal	:	Simultaneous transmission of digital and 4-20 mA DC signal isolated linear standard protocol (HART).
04.	Signal Processing	:	Silicon solid state electronic circuitry
05.	Measuring Element	:	Capsule / Diaphragm
06.	Measuring element	:	AISI-316 (Stainless Steel) Diaphragm material
07.	Static Pressure	:	150 % of maximum span continuously, without affecting the calibration.
08.	Turn-down ratio	:	100 : 1 minimum.
09.	Span and Zero	:	Locally adjustable with interacting facility or remotely accessible with HART based communicator for elevation and suppression by 100% of span
10.	Enclosure Class	:	IP-65 (Explosion proof for NEC Class-1, Division 1 area)
11.	Output Indicator (Digital display)	:	LCD type in % and engineering unit and LCD failure shall not affect the transmitter operation.
12.	Nameplate	:	Tag number, service engraved in stainless steel tag plate
13.	Body	:	Forged Carbon Steel (SS for DM Water).
14.	Operating Voltage	:	18 - 36 Volts D.C.
15.	Load	:	750 Ohms (min.) at 24 Volts D.C.
16.	Ambient Temperature	:	0 - 85 ^{O}C
17.	Performance:		
	i) Accuracy	:	+ 0.04% or better of FSR for BTG package, + 0.065% or better of FSR for BOP packages and + 0.2% for remote seal type transmitter.
	ii) Repeatability	:	± 0.05% of calibrated Span or better
	iii) Warranty & stability	:	min. of 5 yrs or better
18.	Sealing/Isolation	:	10 meters SS armoured capillary with suitable fill fluid and flange remote seal diaphragm of SS 316 or suitable material as per application, for corrosive, viscous and dirty fluid application. Flange size and pressure rating as per application.
19.	Accessories	:	a) Universal mounting bracket suitable for 2" pipe and wall mounting. b) High tensile carbon steel U- bolts. c) Installation accessories as per relevant installation drawing. d) Syphons for steam and hot water services. e) ½" NPT 2-valve stainless steel manifold, constructed from SS316 bar stock.

f) Companion flange with nuts, bolts and gaskets.
g) Hand held configuration kit for diagnostics and calibration of Smart Transmitter locally or in remote.
h) ¾" ET cable gland
i) Flushing facility at process end diaphragm.
j) Reverse polarity protection required.
k) Three way SS manifold for (gauge) vacuum

B. Differential Pressure Transmitter

01.	Working Principle	:	Smart
02.	Type	:	2-Wire
03.	Output signal	:	Simultaneous transmission of digital and 4-20 mA DC signal isolated linear standard protocol -HART.
04.	Signal Processing Unit	:	Silicon solid-state electronic circuitry
05.	Measuring element	:	Capsule/Diaphragm
06.	Measuring element Material	:	AISI-316 (Stainless Steel)
07.	Static Pressure/ Overload Pressure	:	Maximum line (or static) pressure on either side without permanent deformation or loss of accuracy
08.	Turn-down ratio	:	100: 1 minimum
09.	Span and Zero	:	Locally adjustable, non-interacting
10.	Enclosure class	:	IP-65 (Explosion proof for NEC Class-1, Division 1 area)
11.	Zero suppression / Elevation	:	At least 100% of Span
12.	Output Indicator (Digital display)	:	LCD type in % and Engineering units
13.	Nameplate	:	Tag number and Service engraved in stainless steel tag plate
14.	Body	:	Forged Carbon Steel (SS for DM Water)
15.	Ambient temperature	:	0 - 85 ^{O} C
16.	Operating Voltage	:	18 - 36 Volts DC
17.	Load	:	750 Ohms at 24 Volts DC
18.	Performance:-		
	i) Accuracy	:	± 0.025 % of calibrated span or better
	ii) Repeatability	:	± 0.05 % of calibrated span or better
19.	Sealing/Isolation	:	6 meters SS armoured capillary with suitable fill fluid and flange remote seal diaphragm of SS 316 or suitable material as per application, for corrosive, viscous and dirty fluid application. Flange size and pressure rating as per application.
20.	Accessories	:	a) Universal mounting bracket suitable for 2" pipe and wall mounting. b) High tensile carbon steel U-bolts. c) Installation accessories as per relevant installation drawing. d) Syphons for steam and hot water services. l) ½" NPT 5-valve stainless steel manifold, constructed from SS316 bar stock. e) Companion flange with nuts, bolts and gaskets. f) Hand held configurator kit for diagnosis and calibration of Smart Transmitter. g) ¾" ET cable gland

h) Flushing facility at process end diaphragm.
i) Reverse polarity protection required.

C. Pressure Switch

01. Type	:	Seal diaphragm, piston actuated.
02. Sensing element material	:	AISI SS-316 diaphragm / piston. All other wetted part SS316.
03. Case Material	:	Epoxy coated steel plate or die-cast aluminum alloy with neoprene gasket and clear glass where applicable.
04. Setter Scale	:	Black graduation on white liner scale. Graduation 0-100% with red pointer for set points.
05. Over range	:	150 % of maximum pressure
06. Process Connection	:	1/2" NPT (M) bottom connected
07. Switch configuration	:	Two SPDT Lead wires (3+3 Nos.) are to be brought externally to the male connector wherein the female pug connector will be inserted to connect the control room cables for easy removal & re - calibration
08. Switch Rating	:	240V, 5A AC/220V, 0.5A DC
09. Switch Type	:	Dual Snap acting, shock & vibration proof
10. Adjustability	:	a) Set-point adjustable over span range. b) Differential adjustable by 10 percent of span (minimum).
11. Sealing Ring	:	Viton, Buna-N
12. Terminal Block	:	Suitable for full ring lugs for cable connection.
13. Cable connection	:	3/4" ET compression gland.
14. Enclosure Class	:	IP-65 (Explosion proof for NEC Class-1, Division 1 area).
15. Performance	:	a) Accuracy ±1.0% b) Accuracy of Setting Indication of ±1.5%
16. Ambient temperature	:	0 – 50 Deg.C
17. Nameplate	:	Tag number, service engraved in stainless steel tag plate
18. Accessories	:	a) Remote diaphragm seal with SS-316 armored capillary for typical application. MOC of seal material shall be as per process fluid requirement. b) Snubbers for pulsating fluid application. c) Retention ring and screws for surface mounting. d) 1/2” NPT 2 Valve SS-316 manifold constructed from bar stock e) ¾” ET cable gland

D. Differential Pressure Switch

01. Type	:	Bellows / Diaphragm / Piston actuated
02. Sensing element material	:	AISI SS-316. For all other wetted part SS 316
03. Case Material	:	Epoxy coated steel plate or die-cast aluminum alloy with neoprene gasket and clear glass where applicable.
04. Setter Scale	:	Black graduation on white scale with 0-100% graduation and provided with red pointer for set point adjustment
05. Over range	:	Static pressure on any one side, the other side being open to atmosphere.
06. Process Connection	:	1/2" NPT (M) bottom connected / back connected.

07.	Switch configuration	:	Two SPDT Lead wires (3+3 Nos.) are to be brought externally to the male connector wherein the female pug connector will be inserted to connect the control room cables for easy removal & re - calibration
08.	Switch rating	:	240V, 5A AC/220V, 0.5A DC.
09.	Switch type	:	Dual Snap acting type contacts, shock and vibration proof.
10.	Adjustability	:	a) Set point adjustable over span range. b) Differential adjustable by 10 % of span (minimum).
11.	Terminal Blocks	:	Suitable for full ring lugs for cable connection.
12.	Cable Connection	:	3/4" ET compression gland.
13.	Performance	:	a) Accuracy of repeatability: ±1.0% of span. b) Accuracy of set point Indication: ±1.5%
14.	Operating Ambient Temperature	:	0 - 50 ^{O} C (Maximum Continuous)
15.	Enclosure	:	IP – 65 (Explosion proof for NEC Class-1, Division 1 area).
16.	Accessories	:	a) Snubbers for pulsating fluid application. b) Retention ring and screws for surface mounting. c) 1/2” NPT 5 Valve SS-316 manifold constructed from bar stock d) 3 / 4” Cable gland
17.	Nameplate	:	Tag number, service engraved in stainless steel tag plate
18.	Preferred Features	:	Free floating bellows attached to high-pressure bellows for temperature compensation.
19.	Remote Seal type for special application	:	a) Silicone oil / fluorolube filled remote diaphragm seal for dirty / viscous / corrosive fluid. b) SS armored capillary at least 3 meters each. c) Adapter flanges with nuts, bolts and gaskets for instrument and process side

E. Pressure Gauge and Differential Pressure Gauge

01.	Type	:	Bourdon/Bellows/Diaphragm
02.	MOC Sensing & Socket	:	AISI-316 SS
03.	Movement Material	:	AISI-304 SS
04.	Case Material	:	Stainless steel casing bayonet type. Enclosure IP-65.
05.	Dial Size	:	Generally 150 mm (100 mm for SWAS gauges)
06.	Scale	:	Black lettering on white background in 270 Deg. arcs.
07.	Window	:	shatterproof toughened glass
08.	Range Selection	:	Normal process pressure – 50 ~ 70 % of range (approximately).
09.	Over-range Protection	:	125% of maximum range by internal stop. External stop at zero
10.	Adjustment	:	Micrometer screw for zero adjustment. Internal micrometer screw for range adjustment.
11.	Element Connection	:	Argon welding
12.	Process Connection	:	1/2" NPT (M) Bottom connection for local mounting, back connection for panel mounting.
13.	Performance	:	Accuracy of ± 1.0 % of span or better for Pressure gauge

			Accuracy of ± 1.6 % of span or better for Differential Pressure gauge
14.	Operating ambient Temperature	:	0 - 50 ^{O}C
15.	Safety Feature	:	Blow out disc. /diaphragm at the back
16.	Accessories	:	a) Snubbers and Glycerin filled for pulsating fluid applications and at pump discharge. b) Stainless steel 316 Diaphragm with Teflon coated seals for corrosive, viscous and solid-bearing or slurry type process fluids. c) 3-Way stainless steel Gauge cock for pressure gauges. Process connection ½" NPT. d) 5-valve SS316 manifold constructed from barstock for differential pressure gauge. Process connection ½" NPT. e) Union, nut & tail piece and other Installation accessories as required.
17.	Applicable standard	:	IS-3624 / 1996
18.	Electrical Contact rating	:	240V, 5A AC/ 220V, 0.5A DC (for gauges with alarm contact). Number of Contacts:2 SPDT
19.	Nameplate	:	Tag number, service engraved in stainless steel tag plate

II. LEVEL

A. Radar Level Transmitters

01.	a) Type	:	1. Guided wave Radar type transmitter of TDR type 2-10 GHz for liquids 2. Radar type transmitter of FMCWR type 24-26 GHz, drop in antenna for coal level
	b) Probe	:	Coaxial
	c) Probe material	:	SS 316 / SS 316L
02.	calibration range	:	as per application
03.	Process medium	:	as per application
04.	Process temperature	:	as per application
05.	Static Pressure	:	Capable of working in vacuum also
06.	Power supply	:	range to be specified by the bid (Loop power available = 24V DC)
07.	Reverse polarity protection	:	required
08.	Output	:	4 to 20mA, 2wire & HART
09.	Accuracy	:	±.03% of measure distance or ±3 mm
010.	Stability	:	Contractor specify
011.	Communication	:	Communication / configuration shall be possible either through integral key pad and display or through hand communicator. If integral key pad is not available, one number hand held communicator common for all the transmitters shall be supplied
012.	Load limitation	:	max 600 ohm at 24V
013.	Span & zero	:	adjustable
014.	Flange mounting	:	yes
015.	Environmental protection	:	IP 66 or better
016.	Process connection	:	traditional flange with ¼" – 18 NPT on flange with process adapters (Flange & drain vent- 316SST)
017.	Electronic housing	:	Aluminium alloy
018.	Electrical connection	:	Preferably ½" – 14 NPT with gland.

B. Capacitance Type Level Transmitter

The total system shall consist of capacitance probe, pre-amplifier and transmitter

01.	Type	:	Capacitance type
02.	Probe	:	a) Rod or suspended electrode. b) Rope type probes may be used only where required probe length is greater than 3 meters
03.	Probe Mounting :	:	Stainless steel 1-1/2 ANSI RF Flange / ¾“ NPT (M)
04.	Material of construction	:	316 SS
05.	Insulation	:	PTFE Part/Full as per service.
06.	Transmitter	:	The transmitter shall receive output of the preamplifier and convert it into 4-20 mA DC output signals.
07.	Accuracy	:	±0.1%
08.	Load	:	750 Ohms or more
09.	Enclosure	:	Powder/Epoxy coated Die cast aluminium. with neoprene gasket conforming to IP-65. (Explosion proof for NEC Class-1, Division 1 area).
10.	Ambient temperature	:	0-60 ºC.
11.	Mounting	:	Wall / Surface
12.	Supply voltage	:	(90-250) V AC, 50 Hz / (18-36) V DC
13.	Response time	:	100 msec or better
14.	Cable connection	:	¾” ET Compression gland
15.	Accessories	:	Counter flange, Cable gland, prefab cable if any
16.	Preferable features	:	Alarm output contacts with adjustable set point facility

C. Ultrasonic Level Transmitter

01.	Type of Transmitter	:	Non contact Microprocessor based 2 wire type, HART protocol Compatible
02.	Output Signal	:	Galvanically isolated 4 – 20 mA DC along with superimposed digital signal (HART protocol)
03.	Sensor Accuracy	:	± 0.25% of calibrated span
04.	Sensor Repeatability	:	3 mm or better
05.	Power Supply	:	18 - 36V DC
06.	Temperature Compensation	:	To be provided within transducer
07.	Configuration	:	Sensor and electronic unit are separate. Electronic unit shall be possible to mount on the accessible location near the transducer. All cables, weather proof fittings for connection between transducer and electronic unit.
08.	Housing	:	IP 55 with durable corrosion resistant Epoxy coating
09.	Calibration	:	Through HART communicator
10.	Zero and Span adjustment	:	Continuous, Tamper proof, Remote as well as manual adjustability. Provision to calibrate the instrument without any level in the tank or sump etc.
11.	Sensor Material	:	Corrosion resistant to suit the individual application
12.	False signal tolerance	:	Facility to be provided. Shall have adjustable damping circuitry.
13.	Range	:	To be decided during detail Engg, with a facility to take care of frequency attenuation due to different obstructions (Surface, vapor)

14.	Display	:	Minimum 4 character display with integral key pad, access protected features.
15.	Diagnostics	:	Loss of echo alarm
16.	Load impedance	:	500 Ω minimum or as per vendor specification.
17.	Electrical connection	:	Plug and socket
18.	Accessories	:	Canopy for protection sunlight and rain Mounting hardware's and accessories shall be SS 316

D. Level Switch

01.	Type	:	External cage float operated. Magnetically coupled.
02.	Float Material	:	AISI-316 stainless steel
03.	Other wetted parts	:	AISI-316 stainless steel
04.	External Cage	:	Carbon steel / Stainless steel as per process requirements, welded type / flanged construction. Cage pressure rating shall equal or exceed the rating of the main vessel.
05.	External cage mounting	:	Side – Side with drain valve.
06.	External cage connection	:	25 NB socket weld to vessel or RF flanged.
07.	Switch housing	:	Epoxy coated die-cast aluminum alloy with neoprene gasket conforming to IP-65. (Explosion proof for NEC Class-1, Division 1 area).
08.	Type of switch Configuration	:	2 SPDT (two nos.) Snap acting magnetically operated hermetically sealed.
09.	Contact rating	:	5A, 240V/AC, 0.5A, 220V DC
10.	Accessories	:	a) Counter flange, nuts & bolts, suitable gasket etc. b) Steel globe type drain valve. c) ¾ " ET cable gland d) Stainless steel alpha-numeric engraved for service and tag.
11.	Preferred feature	:	Switch operating point marked on cage
12.	Temperature rating	:	As per application

E. Conductivity Type Level Switch

01	Type	:	Conductivity discrimination.
03	Mounting	:	Flanged – on standpipe.
04	Probe MOC	:	Stainless steel with high purity ceramic.
05	Probe rating	:	> Maximum design pressure of vessel.
06	Input	:	four independent channels with selectable switching threshold for water conductivity.
07	Relay Output	:	Four isolated output relays for HI, LO, HI-HI, LO-LO.
08	Contact type & rating	:	2SPDT @ 0.5A 220V DC / 5 A 240V AC
09	Local Display	:	Colored LEDs for HI, LO, HI-HI, LO-LO. Power & fault.
10	Power supply	:	Dual (90-250) V AC, 50 Hz, 1Ph.
11	Enclosure	:	IP–65, corrosion resistant & wall mounting type (Explosion proof for NEC Class-1, Division-1 area).
12	Accessories	:	Teflon (PTFE) cable having Teflon wrapped individual cores and necessary sheathing shall be used to connect the probe with electronics
13	Test pressure	:	Two times rated pressure
14.	Cable connection	:	¾" ET Compression gland

F. Capacitance Type Level Switch

01	Type	:	Capacitance type
02	Probe	:	a) Rod or suspended electrode b) Rope type probes may be used only where required probe length is greater than 3 meters.
03.	Probe Mounting	:	Stainless steel 1 ½" ANSI RF Flange / ¾ "NPT (M)
04.	Material of construction	:	316 SS
05.	Insulation	:	PTFE Part/Full as per service.
06.	Enclosure	:	Powder/Epoxy coated Die cast Aluminium with neoprene gasket conforming to IP-65. (Explosion proof for NEC Class-1, Division 1 area).
07.	Ambient temperature	:	0-60 ºC.
08.	Mounting	:	On Tap
09.	Supply voltage	:	(90-250) V AC, 50 Hz / 18-36 V DC
10.	Relay output	:	2 SPDT @ 0.5 A 220V DC / 5A 240V AC
11.	Response time	:	100 msec or better
12.	Cable connection	:	¾" ET Compression gland
13.	Accessories	:	Counter flange, Cable gland, prefab cable and stainless steel name plate engraved with alpha-numeric.

G. Level Switch (Ultrasonic Type)

Ultrasonic type level switch, IP-65 protection; Switch with 2 nos. of SPDT contacts (1 NO and 1 NC) rated for 0.2 A, 220 V DC; Accuracy ±0.25%; Resolution 1mm; Repeatability ±0.1%; Linearity ±1%; Response time 150ms; Beam angle <12º; Auto false echo-suppression; Accessories like integral cable between sensor and transmitter unit with connectors on both side, gasket and cable gland, digital panel meter, name plate & metal tag; the material of accessories will be SS.

H. Level Switch (Radar Type)

Radar type level switch, top mounted, IP-65 protection; Switch with 2 nos. of SPDT contacts (1 NO and 1 NC) rated for 0.2 A, 220 V DC, Accuracy ±1%; Resolution 0.04"; Repeatability ±0.04"; Linearity ±0.01%; Beam angle <20º; Accessories like integral cable between sensor and transmitter unit with connectors on both side, gasket and cable gland, name plate & metal tag; the material of accessories will be SS.

I. Conductivity Type Electronic Level Indicator

01	Type	:	Conductivity discrimination.
02	No. of Probes	:	14, 16 or 32 as per application.
03	Probe Mounting	:	Screw type / Flanged – on standpipe.
04	Probe MOC	:	Stainless steel with high purity ceramic.
05	Probe rating	:	> Maximum design pressure of vessel.
06	Input	:	Independent channel with selectable switching threshold for water conductivity.
07	Relay Output	:	Four isolated output relays for Hi, Lo, Hi-Hi, Lo-Lo.
08	Contact type & rating	:	2 SPDT @ 0.5 A 220V DC / 5A 240V AC
09	Current output	:	Isolated 4-20 mA DC & HART
10	Local Display	:	Red, Green and flashing yellow LED's for steam, water and fault indication respectively.
11	Remote Display	:	Red, Green & flashing yellow LEDs for steam, Water & Fault indication respectively.
12	Power supply	:	Dual (90-250) V AC, 50 Hz, 1Ph.

13	Enclosure	:	i) IP–65, corrosion resistant & wall mounting type for local electronics. ii) IP-42 for remote indicator
14	Accessories	:	i) PTFE cable from probe to electronics ii) Mounting accessories. iii) Standpipe iv) Washer & gaskets
15	Test pressure	:	Two times design pressure
16.	Alarm levels	:	Probe number shall be selectable for HI, LO, HIHI, LOLO

J. Level Gauge (Float & Tape)

01.	Type	:	Float and Tape
02.	Float & Tape MOC	:	AISI 316
03.	Pulley material	:	Aluminium
04.	Guide wire	:	SS 316 Stainless steel
05.	Accuracy	:	+/- 2 mm
06.	Indication	:	On circular or vertical dial
07.	Rating	:	Twice the design pressure

K. Silo pilot

01.	Application	:	Solid material in Material bins, silos, etc.
02.	Power supply	:	(90-250) V AC, + 10%, 50 Hz selectable.
03.	Mounting	:	Top with ANSI RF Flange
04.	Protection class	:	IP-65.
05.	Ambient	:	65 ^{O} C (Max.) dust laden atmosphere
06.	Housing	:	Cast aluminum with sun Cover
07.	Measuring rope	:	Corrosion resistant steel
08.	Counting step	:	1 pulse/1-10cm depending on application
09.	Output from sensor	:	Change over contact
10.	Motor	:	1 phase

Electronics

01.	Type	:	Microprocessor based
02.	A/M Switch	:	Yes, in auto mode level measurement in regular interval as set in the instrument.
03.	Output	:	a) 4-20 mA DC (stored D/A) & if applicable HART protocol b) 2 nos. SPDT contacts
04.	No. of set points	:	2 nos.
05.	Min. counting pulse	:	20 mins.
06.	Mounting	:	Wall or 19” rack
07.	Enclosure	:	IP 65

III. FLOW INSTRUMENTS

1. Mass Flow Meter

A Sensor

01.	Measuring Principle	:	Coriolis Mass flow.
02.	Primary Element	:	Flow Tube of 316SS or better (Suitable for the process fluid)
03.	Heating Arrangement	:	Integral with Flow Element.
04.	Temperature Control For Heating	:	To be provided.
05.	Process Connection	:	ANSI RF Flanged and rating as per process requirement.
06.	Drain	:	Self-draining facility

07.	Accessories	:	Counter flanges, Mounting nuts, bolts, gaskets etc.

B Transmitter

01.	Measured quantities	:	Mass Flow rate, Total Mass Flow, Density, Temperature as minimum.
02.	Input Signal Processing	:	Digital Processing.
03.	Display	:	Digital Display (LCD).
04.	Output	:	2 Nos. isolated output of 4-20mA DC selectable from four measured quantities.
05.	Load	:	< 750 ohms.
06.	Power supply	:	(90-250) V AC, 50 Hz.
07.	Turn Down	:	100:1
08.	Accuracy	:	± 0.2% of measured value
09.	Ambient Temperature	:	85°
10.	Repeatability	:	± 0.05%
11.	Housing	:	IP 65 (Explosion proof for NEC Class-1, Division 1 area)
12.	Hazardous duty Version	:	FM Standards.
13.	Nameplate	:	Tag number, service engraved in stainless steel tag plate
14.	Accessories	:	a) As required for field mounting b) Handheld configurator c) Mounting U-bolts, nuts, bolts, prefab cable etc. d) ¾" ET cable gland

2. Turbine Flow Meter

A. Sensor

01.	Type	:	Turbine (in line full-bore, based on magnetic pick of pulses)
02.	Output Signal	:	Pulse
03.	Material of Construction	:	a) Body : AISI 316 b) Rotor: AISI 431 or 410 c) Bearings: Tungsten Carbide / Stellited Sleeve
04.	Flow rate range	:	As required.
05.	Linearity	:	±0.25% or better.
06.	Repeatability	:	± 0.02% or better.
07.	Ambient temperature	:	50 ^{O}C
08.	Mounting	:	On-Line mounting with ANSI RF flanges of stainless steel.
09.	Enclosure	:	IP 65

B. Transmitter

01.	Electronics	:	Solid State
02.	Power Supply	:	(90-250) V AC, 50 Hz.
03.	Input	:	Input from Sensor
04.	Display	:	4 1/2 digit LCD
05.	Output	:	Isolated 4-20mA DC & HART
06.	Measuring Accuracy	:	± 0.5% of full scale range
07.	Totalized Value	:	Required
08.	Housing	:	IP-65 (Explosion proof for NEC Class-1, Division 1 area)
09.	Nameplate	:	Tag number, service engraved in stainless steel tag plate
10.	Accessories	:	a) clamping strip, bracket, prefab cable etc. b) Calibration or configurator kit. c) ¾" ET cable gland

3. Vortex Flow Meter

A. Sensor

01.	Type	:	Vortex
02.	Output Signal	:	Pulse
03.	Material of Construction	:	AISI 316
04.	Sensor Seal	:	PTFE / higher based on temperature
05.	Flow range	:	As required.
06.	Linearity	:	±0.25% or better.
07.	Repeatability	:	± 0.1 of actual flow rate or better.
08.	Ambient temperature	:	85 ^{O}C
09.	Mounting	:	On-Line mounting with flanges of stainless steel.
10.	Enclosure	:	IP 65
11.	Accessories	:	Nuts, bolts, gaskets etc.

B. Transmitter

01.	Electronics	:	Solid State
02.	Power Supply	:	(90-250) V AC, 50 Hz.
03.	Input	:	Input from Sensor
04.	Display	:	4 ½ digit LCD
05.	Output	:	Isolated 4-20mA DC & HART
06.	Measuring Accuracy	:	± 0.025% of span
07.	Totalized Value	:	Required
08.	Housing	:	IP-65 (Explosion proof for NEC Class-1, Division 1 area)
09.	Nameplate	:	Tag number, service engraved in stainless steel tag plate
10.	Accessories	:	a) Clamping strip, bracket, prefab cable etc. b) Special tool kit for calibration / configuration. c) ¾" ET cable gland

4. Electro-Magnetic Flow Meter

A. Sensor

01.	Measuring Principle	:	Faraday's law of Electro-magnetic induction.
02.	Primary Element	:	Flow Tube of 316SS or better
03.	Service	:	Conductive Liquids and Slurries
04.	Sensor type	:	Insertion style / Wafer style
05.	Process Connection	:	ANSI RF Flanged and rating as per process requirement.
06.	Accessories	:	Counter flanges, Mounting nuts, bolts, gaskets etc.

B. Transmitter

01.	Measured quantity	:	Volumetric Flow rate
02.	Input Signal Processing	:	Digital Processing.
03.	Display	:	Digital Display (LCD).
04.	Output	:	Isolated output of 4-20mA DC & HART
05.	Load	:	< 750 ohms.
06.	Power supply	:	(90-250) V AC, 50 Hz.
07.	Turn Down	:	100:1
08.	Ambient Temperature	:	74℃
09.	Accuracy	:	± 0.25% of measured value
10.	Repeatability	:	± 0.1% of Reading.
11.	Housing	:	IP 65 (Explosion proof for NEC Class-1, Division 1 area)
12.	Hazardous duty Version	:	FM Standards.

13. Nameplate : Tag number, service engraved in stainless steel tag plate

14. Accessories :
    a) As required for field mounting
    e) Handheld configurator
    f) Mounting U-bolts, nuts, bolts, prefab cable etc.
    g) ¾" ET cable gland

5. Ultra sonic type Flow Meter

Ultra sonic type flow elements shall be provided for measurement of CW flow.

i) Ultrasonic Flow meter shall be dual path transit time clamp-on type.

ii) The flow meters shall be of proven reliability, accuracy and repeatability requiring a minimum of maintenance. They shall comply with relevant international standards and shall be subject to approval.

iii) All accessories required for mounting/erection of these instruments shall be furnished, erected and installed as necessary for completeness of the system though not specifically asked for. Also the equipment shall include necessary cables, flexible conduits, junction boxes required for the purpose.

iv) Flow meters shall be provided with suitable environment protection devices/structures such that they shall be suitable for continuous operation in the operating environment of a coal fired utility station without any loss of function or departure from the specification requirements.

Type	Transit time Clamp On Ultrasonic meter
Mounting Style	Dual path with two sets of transducers on the same pipe
Flow measurement	Instantaneous Flow rate as well as totalized flow
Power supply	230 V AC
Outputs :	
Analog Current	Isolated 4-20mA linear outputs for each path
Binary	Contact relay outputs, 2 NO + 2 NC for alarm
Communication ports	RS 232 C digital Hand held terminal port
Display/Indication	Flow meter with LCD screen backlight based local display and keypad. If required, transmitter shall be suitably located away from the sensor for better access and visibility.
Recording / Totalizing /Logging Facilities	Yes. Should be able to compute cumulative flow over intervals selectable by owner i.e., daily, weekly, monthly etc. The data shall be stored in the memory of flow computer for access in future
Software features	Compensation for any cross path errors Programming, configuration, shall be possible from front panel.
Diagnostics	False signal tolerance , power supply failure etc
Protection class	IP-65 or better, Weather protection against direct sunlight, rain etc for Flow meter and suitable for Cooling water for Transducer
Accuracy	+/- 1%
Electrical connection	Plug and socket
Accessories	All mounting hardware required like clamping fixtures, mechanism to remove the transducers online, interconnecting cables etc All weather canopy for protection from direct sunlight and direct rain. Material of all fittings shall be SS316.

6. Rotameter

01.	Type	:	On-line and by-pass
02.	Metering tube	:	Borosilicate glass
03.	Float	:	AISI 316-SS unless the process fluid demands some other material.
04.	Packing material	:	Teflon
05.	Body MOC	:	CS or SS as per fluid condition.
06.	Scale	:	Graduated- Engraved black on white background.
07.	Process connection	:	Flanged (RF) to line size as per ANSI standards.
08.	Accuracy	:	± 2% of full scale detection or better for on-line type and ±4% of full-scale detection or better for by-pass type.
09.	Nameplate	:	Tag number, service engraved in stainless steel tag plate
10.	Accessories	:	Slip-on orifice plate of 316-SS and taps of CS / SS as per application requirements. Applicable CS / SS Isolation valves and SS Range Orifice - for bypass type rotameters.
11.	Pressure Rating	:	As per application
12.	Flow & Scale length	:	To be decided by Contractor.

7. Orifice Plate

01.	Type	:	Ring joint / Flange type or other required type (To be decided by Contractor)
02	Material l	:	316 SS connection office
03.	Application	:	Low fluid velocity flow measurement
04.	Design Standard	:	BS-1042, Part-I
05.	Number of Tapings	:	One additional pair of taps for performance test. (i.e. for control measurement, 3+1 pair of taps to be provided, for monitoring measurement, 2+1 pair of taps to be provided)
06.	Diameter Ratio	:	Between 0.4 to 0.7
07.	Accessories	:	Flanges, gaskets, nuts & bolts, root valves jack screw etc.

8. Flow Nozzle : flow element shall have 3 pair of differential pressure tapping

01.	Application	:	High fluid velocity flow measurement
02.	Design Standard	:	ASME PTC 19.5
03.	Number of Tapings	:	One additional pair of taps for performance evaluation (i.e. for control measurement, 3+1 pair of taps to be provided, for monitoring measurement, 2+1 pair of taps to be provided)
04.	Diameter Ratio	:	Between 0.4 and 0.7
05.	Accessories	:	Meter run pipe, nipples and root valves. (Inspection port assembly for nozzles used in plant performance purpose)

9. Sight Glass

01.	Type	:	Flap-type
02.	End connection	:	Screwed / Flanged
03.	Material:		
	a) Body	:	SS-304
	b) Cover Plate	:	SS-304
	c) Indicator	:	SS-316
04.	Sight Glass	:	Toughened Borosilicate
05.	Gasket	:	Neoprene
06.	Bolts & Nuts	:	High tensile steel

07.	Hydraulic Test Pressure	:	1.5 times maximum working pressure
08.	Accessories	:	As required

10. Gauge Glass : flow element shall have 3 pair of differential pressure tapping

01.	Type	:	Reflex
02.	Glass	:	Toughened borosilicate. Resistant to mechanical and thermal shocks.
03.	Body material	:	SS-304 / 316 / Carbon steel – As per process requirements (Flanged Connection)
04.	Pressure rating	:	Twice the maximum working pressure
05.	Temperature rating	:	300 ^{O} C
06.	Bolts and nuts	:	Rust proof alloy steel
07.	Accessories	:	Suitable ball check valves of SS- 304/316 body, gaskets, companion flange etc.

11. Flow Switches

Indicating, Differential pressure, flapper type on line flow switches for line sizes up to 80 mm with an accuracy of +/-0.5% of span and dial size of min. 50 mm having 316 SS flapper/SS 316 bellows housed in die cast aluminium. Micro switch with adjustable range with 2 SPDT contacts rated for 0.2 A, 220 V DC. IP 65 or equivalent degree of protection for enclosure. The material of accessories shall be SS. Repeatability shall be +/-0.5% of span. Over range protection shall be 50% above maximum flow. Setting shall be tamper proof external adjustment & scale shall be provided for setting. Range spring & orifice plate shall be SS 316 for DP type. NPT for sizes below 2" & for sizes above 2" ANSI 150 RF shall be provided. Accessories like nameplate, mating flanges with gaskets, bolts & nuts, pipe assembly with orifice plate, etc. 5 way manifold, pipe, fittings (DP type), etc. shall be supplied

IV TEMPERATURE INSTRUMENTS

1. Thermocouples

01.	Type	:	a) Type-T (Copper Constantan) or Type-K (Chromel Alumel) [As per specification requirement] b) Duplex c) Ungrounded
02.	Wire gauge	:	16 AWG
03.	Standard	:	ANSI-MC 96.1.
04.	Protecting Tube:-		
	i) O.D.	:	8 mm (approx.)
	ii) Material	:	316-SS Seamless
	iii) Filling	:	Magnesium Oxide (Purity above 99.4%)
05.	Response time	:	a) Less than 2 to 6 seconds. . b) Less than 10 seconds for control.
06.	Head:		
	i) Type	:	IP-65 universal screwed type. (Explosion proof for NEC Class-1, Division 1 area)
	ii) Material	:	Die cast aluminum or better
	iii) Terminal blocks	:	Nickel plated Brass - screw type / silver plated
	iv) Cable connection	:	3/4" ET gland and grommet.
	v) Others	:	Terminal head cover with SS chain and suitable gasket
07.	Accessories	:	a) Adjustable nipple-union-nipple with thermowell connection

			b) Compression fittings/unions c) Flanges etc. (for flanged connections only) c) SS 316 forged thermowell as per ASME PTC code.
08.	Nameplate	:	Tag number, service engraved in stainless steel tag plate
09.	Static Pressure Limit	:	As per application.
10.	Length	:	As per application
11.	Limits of error @ 0 Deg Ref.:		For K type + 1 Deg C or 0.4% (Greater Value) For T type + 0.5 Deg C or 0.4% (Greater Value)

2. Resistance Temperature Detector

01.	Type	:	Platinum (Duplex), ungrounded class 'A'
02.	Resistance	:	100 ohm at 0 ^{O}C
03.	Base	:	Wound on ceramic (anti-inductive)
04.	Wiring	:	3 Wire
05.	Protecting Tube :-		
	i) O.D.	:	8 mm (approx).
	ii) Material	:	SS-316, Seamless
	iii) Filling	:	Magnesium oxide (Purity above 99.4%).
	iv) Length	:	As per application
06.	Response time	:	a) 1 to 2 seconds
07.	Head:		
	i) Type	:	IP-65 universal screwed type. (Explosion proof for NEC Class-1, Division 1 area)
	ii) Material	:	Die cast aluminum or better
	iii) Terminal blocks	:	Nickel plated Brass-screw type / silver plated
	iv) Cable connection	:	3/4" ET gland and grommet.
	v) Others	:	Terminal head cover with SS chain and suitable gasket
08.	Accessories	:	a) Adjustable nipple-union-nipple with thermowell connection b) Compression fittings/unions c) Flanges etc. (for flanged connections only) d) SS 316 forged thermowell as per ASME PTC code.
09.	Nameplate	:	Tag number, service engraved in stainless steel tag plate
10.	Standard	:	Standard DIN 43760
11.	Limit of error	:	@ 0 Deg C ± 0.06 Ohm @ 100 Deg C + 0.13 Ohm @ 200 Deg C ± 0.20 Ohm @ 300 Deg C ± 0.27 Ohm

3. Field Mounted Temperature Transmitters

01.	Working Principle	:	Smart
02.	Type	:	Two wire
03.	Input	:	Universal (T/C of different types, PT 100 RTD and other RTDs)
03.	Output Signal	:	Simultaneous transmission of digital and 4-20 mA DC signal with HART.
04.	Signal Processing Circuitry	:	Microprocessor based Solid State Electronic
05.	Span and Zero	:	Adjustable in field, Non-interacting facility for elevation and suppression of zero.
06.	Enclosure Class	:	IP-65 (Explosion proof for NEC Class-1, Division 1 area)
07.	Output Indicator	:	LCD type

08.	Span Adjustability	:	Yes
09.	Nameplate	:	Tag number to be engraved on metallic tag plate rigidly fixed to the body.
10.	Body	:	Die Cast aluminum
11.	Operating Voltage	:	18-36 V DC
12.	Load	:	600 Ohms at 24V DC (Min.)
13.	Performance		
	i) Accuracy	:	0.2% of span
	ii) Repeatability	:	±0.05% of span
	iii) Cold Junction Compensation	:	Built-in
	iv) Calibration	:	As per N.I.S.T Monograph 125 for T/C and European Curve Alpha = 0.00385 for RTD
14.	Accessories	:	a) Universal mounting bracket suitable for pipe and surface mounting. b) Hi-tensile Carbon Steel U-bolts.

4. Thermo Well

Thermo wells Pipe/equipment mounted temperature test wells of 316 SS with a process connection of M33x2 thread or 150 RF flanged and instrument connection of ½" NPT (F) in general or 150 RF flanged.. Accessories like name plate, plug with chain, etc. shall be provided. Material of accessories shall be SS. Thermowell shall be hex head of barstock assembly. In case flanged wells are required for any specific application, the same shall be supplied as required. The thermo well construction shall meet the ANSI 19.3 (latest) requirements. Thermo well shall be designed such that the resonant frequency is above the exciting frequencies generated by vortex shedding in the process fluid. All Test thermo well shall have the plug of SS316.

For measurement of pulveriser outlet temperature tungsten carbide block thermowells abrasion resistant not tungsten carbide coated thermowell shall be used. Also the terminals of Thermocouple shall not be at the top of Mills itself. The thermocouple wires are to be laid up to JB through SS tubing of required diameter and the head shall be placed nearer to the JB. Compensating cable exposed to atmosphere in the conventional method melts away due to high temperature at the top of Mill.

For measurement of sea water temperature SS with titanium sleeve thermo wells or better, shall be used.

5. Temperature Switch

01.	Type	:	Mercury filled-in
02.	Sensing Element Material	:	Bellow / Bourdon AISI SS-316
03.	Bulb Material	:	AISI SS-316
04.	Capillary	:	Stainless steel armored
05.	Movement Material	:	AISI SS-304
06.	Case material	:	Epoxy coated steel plate or die-cast aluminum alloy with neoprene gasket and clear glass where applicable cover conforming to IP-65. (Explosion proof for NEC Class-1, Division 1 area).
07.	Scale	:	Black lettering on white background
08.	Over range Protection	:	120 %
09.	Instrument connection	:	Bottom
10.	Switch configuration	:	Two SPDT Lead wires (3+3 Nos.) are to be brought externally to the male connector wherein the female pug connector will be inserted to connect the control room cables for easy removal & re - calibration

11.	Switch rating	:	240V, 5A AC/220V, 0.5A DC
12.	Switch type	:	Snap acting, shock and vibration-proof.
13.	Adjustability	:	a) Internal Set point adjustable over span range b) Differential adjustable by 10% of span (minimum)
14.	Cable connection	:	3/4" ET compression gland.
15.	Compensation	:	a) Capillary compensation with invar wire throughout the capillary length. b) Case compensation
16.	Performance:		
	i) Scale Accuracy	:	±1.0 % of full scale
	ii) Repeatability	:	< 0.5 % of full range
	iii) Response time	:	Less than 40 seconds with thermowell
17.	Capillary length	:	5 meters (minimum) for local mounting/15 meters for local panel mounting.
18.	Nameplate	:	Tag number, service engraved in stainless steel tag plate
19.	Accessories	:	Mounting accessories, 3/4”ETcable gland

6. Temperature Gauge

01.	Type	:	Mercury filled-in remote mounting system Capillary armoured / rigid system type (backward entry / bottom entry)
02.	Sensing Element Material	:	Bourdon - AISI-316 SS
03.	Capillary Armoring	:	Stainless steel flexible
04.	Movement Material	:	AISI 304 SS / Direct Bourdon tip connection to pointer spindle
05.	Bulb Diameter and Length	:	As required
06.	Bulb Material	:	AISI 316
07.	Capillary	:	Stainless Steel
08.	Thermometer	:	M 20 x 1.5 Male adjustable gland on stem to suit associated Thermowell
09.	Case Material	:	Stainless steel bayonet type with clear glass cover conforming to IP-65.
10.	Dial Size	:	150 mm in general (100 mm for SWAS gauges)
11.	Scale	:	Black lettering on white background in 270 Deg. arc.
12.	Mounting	:	Surface/Panel
13.	Over range Protection	:	125 % of range or more
14.	Instrument connection	:	Bottom connection for local mounting and back connection for panel mounting.
15.	Range	:	50% ~ 70% range of operating temperature of application approximately.
16.	Compensation	:	Case compensation
17.	Zero adjuster	:	Micrometer screw adjustable from front.
18.	Window	:	Shatterproof toughened glass.
19.	Performance	:	Accuracy of ± 1 % of full-scale deflection or better.
20.	Enclosure Class	:	IP-65
21.	Capillary	:	5 meters (local)/15.0 meters (local panel) - armored stainless steel
22.	Preferred Feature	:	Capillary Compensation
23.	Accessories	:	a) Forged SS 316 thermowell weldable or screwed as per ASME PTC code b) Installation accessories as required.
24.	Nameplate	:	Tag number, service engraved in stainless steel tag plate
25.	Immersion length	:	Adjustable up to 300 mm including bulb length or as per application